Addendum No. 4

RFB No:	**PK-HESCO-GOODS-APMS--ICB/10**
Description	*Supply & Installation of 8,600 Nos. Asset Performance Management System (APMS), (Ordering Code:* **APMS-MC-S)** *on Distribution Transformers Of 200KVA (3500 Nos.) and 100kVA (5,100 Nos.) Ratings within the jurisdiction of HESCO.*

This Addendum is being issued on 31/8/26 to amend the Request for Bids (RFB) for the above-referenced tender by **replacing the complete Bidding Document with the Revised Bidding Document attached herewith**. Bidders shall use the Revised Bidding Document for the preparation and submission of their bids.

Note:

1. The previously issued Bidding Document shall be deemed superseded and replaced in its entirety by the Revised Bidding Document.
2. Revised Bidding Documents is also available on HESCO website www.hesco.gov.pk
3. The deadline for submission and opening of bids shall remain unchanged, unless otherwise specified in this Addendum.

31/8/26

Chief Engineer (Development)
PMU, HESCO, Hyderabad.

CamScanner

-

Request for Bids
Goods
(Two-Envelope Bidding Process)

REVISED

Procurement of:

Supply & Installation of 8,600 Nos. Asset Performance Management System (APMS) (Ordering Code: **APMS-MC-S**) *on Distribution Transformers Of 200KVA (3500 Nos.) and 100kVA (5,100 Nos.) Ratings within the jurisdiction of HESCO.*

RFB No: ***PK-HESCO-GOODS-APMS -ICB/10***

Project: Electricity Distribution Efficiency Improvement Project (EDEIP)
Purchaser: Hyderabad Electric Supply Company (HESCO)
Country: Pakistan
Issued on: ----------

Standard Procurement Document

Table of Contents

PART 1 – Bidding Procedures 3

Section I - Instructions to Bidders 5
Section II - Bid Data Sheet (BDS) 43
Section III - Evaluation and Qualification Criteria 51
Section IV - Bidding Forms 59
Section V - Eligible Countries 81
Section VI - Fraud and Corruption 83

PART 2 – Supply Requirements 85

Section VII - Schedule of Requirements 86

PART 3 – Contract 155

Section VIII - General Conditions of Contract 157
Section IX - Special Conditions of Contract 181
Section X - Contract Forms 189

`

PART 1 – Bidding Procedures

Section I - Instructions to Bidders

Contents

A. General 7
1. Scope of Bid 7
2. Source of Funds 7
3. Fraud and Corruption 8
4. Eligible Bidders 8
5. Eligible Goods and Related Services 11

B. Contents of Request for Bids Document 12
6. Sections of Bidding Document 12
7. Clarification of the Bidding Document 13
8. Amendment of Bidding Document 13

C. Preparation of Bids 14
9. Cost of Bidding 14
10. Language of Bid 14
11. Documents comprising Bid 14
12. Letters of Bid 16
13. Alternative Bids 16
14. Bid prices and Discounts 16
15. Currencies of Bid and Payment 19
16. Documents Establishing the Eligibility and Conformity of the Goods and Related Services 19
17. Documents Establishing the Eligibility and Qualifications of the Bidder 20
18. Period of Validity of Bids 21
19. Bid Security 22
20. Format and Signing of Bid 24

D. Submission of Bids 24
21. Sealing and Marking of Bids 24
22. Deadline for Submission of Bids 25
23. Late Bids 26
24. Withdrawal, Substitution, and Modification of Bids 26

E. Public Opening of Technical Parts of Bids 27
25. Public Opening of Technical Parts of Bids 27

F. Evaluation of Bids - General Provisions 29
26. Confidentiality 29

27. Clarification of Bids....29
28. Deviations, Reservations, and Omissions....29
29. Nonconformities, Errors and Omissions....30

G. Evaluation of Technical Parts of Bids....30

30. Evaluation of Technical Parts....30
31. Determination of Responsiveness....30
32. Qualification of the Bidders and Detailed Evaluation of the Technical Part....31

H. Notification of Evaluation of Technical Parts and Public Opening of Financial Parts of Bids....32

33. Notification of Evaluation of Technical Parts and Public Opening of Financial Parts 32

I. Evaluation of Financial Parts of Bids....34

34. Evaluation of Financial Parts....34
35. Correction of Arithmetic Errors....36
36. Conversion to Single Currency....36
37. Margin of Preference....37
38. Comparison of Financial Parts....37
39. Abnormally Low Bids....37

J. Evaluation of Combined Technical and Financial Parts, Most Advantageous Bid and Notification of Intention to Award....37

40. Evaluation of combined Technical and Financial Parts....38
41. Purchaser's Right to Accept Any Bid, and to Reject Any or All Bids....38
42. Standstill Period....38
43. Notification of Intention to Award....38

K. Award of Contract....39

44. Award Criteria....39
45. Purchaser's Right to Vary Quantities at Time of Award....39
46. Notification of Award....39
47. Debriefing by the Purchaser....40
48. Signing of Contract....41
49. Performance Security....42
50. Procurement Related Complaint....42

Section I - Instructions to Bidders

A. General

1. **Scope of Bid**

1.1 In connection with the Specific Procurement Notice, Request for Bids (RFB), specified **in the Bid Data Sheet (BDS),** the Purchaser, as specified **in the BDS,** issues this bidding document for the supply of Goods and, if applicable, any Related Services incidental thereto, as specified in Section VII, Schedule of Requirements. The name, identification and number of lots (contracts) of this RFB are specified **in the BDS.**

1.2 Throughout this bidding document:

(a) the term "in writing" means communicated in written form (e.g. by mail, e-mail, fax, including, if **specified in the BDS**, distributed or received through the electronic-procurement system used by the Purchaser), with proof of receipt;

(b) if the context so requires, "singular" means "plural" and vice versa; and

(c) "Day" means calendar day, unless otherwise specified as "Business Day". A Business Day is any day that is an official working day of the Borrower. It excludes the Borrower's official public holidays.

2. Source of Funds

2.1 The Borrower or Recipient (hereinafter called "Borrower") specified **in the BDS** has applied for or received financing (hereinafter called "funds") from the International Bank for Reconstruction and Development or the International Development Association (hereinafter called "the Bank") in an amount specified **in the BDS,** toward the project named **in the BDS.** The Borrower intends to apply a portion of the funds to eligible payments under the contract for which this bidding document is issued.

2.2 Payment by the Bank will be made only at the request of the Borrower and upon approval by the

Bank in accordance with the terms and conditions of the Loan (or other financing) Agreement. The Loan (or other financing) Agreement prohibits a withdrawal from the loan account for the purpose of any payment to persons or entities, or for any import of goods, if such payment or import is prohibited by a decision of the United Nations Security Council taken under Chapter VII of the Charter of the United Nations. No party other than the Borrower shall derive any rights from the Loan (or other financing) Agreement or have any claim to the proceeds of the Loan (or other financing).

3. Fraud and Corruption

3.1 The Bank requires compliance with the Bank's Anti-Corruption Guidelines and its prevailing sanctions policies and procedures as set forth in the WBG's Sanctions Framework, as set forth in Section VI, Fraud and Corruption.

3.2 In further pursuance of this policy, bidders shall permit and shall cause their agents (where declared or not), subcontractors, subconsultants, service providers, suppliers, and personnel, to permit the Bank to inspect all accounts, records and other documents relating to any initial selection process, prequalification process, bid submission, proposal submission, and contract performance (in the case of award), and to have them audited by auditors appointed by the Bank.

4. Eligible Bidders

4.1 A Bidder may be a firm that is a private entity, a state-owned enterprise or institution (subject to ITB 4.6), or any combination of such entities in the form of a joint venture (JV) under an existing agreement or with the intent to enter into such an agreement supported by a letter of intent. In the case of a joint venture, all members shall be jointly and severally liable for the execution of the entire Contract in accordance with the Contract terms. The JV shall nominate a Representative who shall have the authority to conduct all business for and on behalf of any and all the members of the JV during the Bidding process and, in the event the JV is awarded the Contract, during contract execution. Unless specified **in the BDS**, there is no limit on the number of members in a JV.

4.2 A Bidder shall not have a conflict of interest. Any Bidder found to have a conflict of interest shall be disqualified. A Bidder may be considered to have a conflict of interest for the purpose of this Bidding process, if the Bidder:

(a) directly or indirectly controls, is controlled by or is under common control with another Bidder; or

(b) receives or has received any direct or indirect subsidy from another Bidder; or

(c) has the same legal representative as another Bidder; or

(d) has a relationship with another Bidder, directly or through common third parties, that puts it in a position to influence the Bid of another Bidder, or influence the decisions of the Purchaser regarding this Bidding process; or

(e) or any of its affiliates participated as a consultant in the preparation of the design or technical specifications of the works that are the subject of the Bid; or

(f) or any of its affiliates has been hired (or is proposed to be hired) by the Purchaser or Borrower for the Contract implementation; or

(g) would be providing goods, works, or non-consulting services resulting from or directly related to consulting services for the preparation or implementation of the project specified in the BDS reference ITB 2.1 (the name of the project), that it provided or were provided by any affiliate that directly or indirectly controls, is controlled by, or is under common control with that firm; or

(h) has a close business or family relationship with a professional staff of the Borrower (or of the project implementing agency, or of a recipient of a part of the loan) who: (i) are directly or indirectly involved in the preparation of the bidding document or specifications of the Contract, and/or the

Bid evaluation process of such Contract; or (ii) would be involved in the implementation or supervision of such Contract unless the conflict stemming from such relationship has been resolved in a manner acceptable to the Bank throughout the Bidding process and execution of the Contract.

4.3 A firm that is a Bidder (either individually or as a JV member) shall not participate in more than one Bid, except for permitted alternative Bids. This includes participation as a subcontractor. Such participation shall result in the disqualification of all Bids in which the firm is involved. A firm that is not a Bidder or a JV member, may participate as a subcontractor in more than one Bid.

4.4 A Bidder may have the nationality of any country, subject to the restrictions pursuant to ITB 4.8. A Bidder shall be deemed to have the nationality of a country if the Bidder is constituted, incorporated or registered in and operates in conformity with the provisions of the laws of that country, as evidenced by its articles of incorporation (or equivalent documents of constitution or association) and its registration documents, as the case may be. This criterion also shall apply to the determination of the nationality of proposed subcontractors or subconsultants for any part of the Contract including related Services.

4.5 A Bidder that has been sanctioned by the Bank, pursuant to the Bank's Anti-Corruption Guidelines, and in accordance with its prevailing sanctions policies and procedures as set forth in the WBG's Sanctions Framework as described in Section VI paragraph 2.2 d. shall be ineligible to be prequalified for, initially selected for, bid for, propose for, or be awarded a Bank-financed contract or benefit from a Bank-financed contract, financially or otherwise, during such period of time as the Bank shall have determined. The list of debarred firms and individuals is available at the electronic address specified in the BDS.

4.6 Bidders that are state-owned enterprises or institutions in the Purchaser's Country may be eligible to compete and be awarded a Contract(s)

only if they can establish, in a manner acceptable to the Bank, that they (i) are legally and financially autonomous (ii) operate under commercial law, and (iii) are not under supervision of the Purchaser.

4.7 A Bidder shall not be under suspension from Bidding by the Purchaser as the result of the operation of a Bid–Securing Declaration or Proposal-Securing Declaration.

4.8 Firms and individuals may be ineligible if so indicated in Section V, Eligible Countries, and:

(a) as a matter of law or official regulations, the Borrower's country prohibits commercial relations with that country, provided that the Bank is satisfied that such exclusion does not preclude effective competition for the supply of goods or the contracting of works or services required; or

(b) by an act of compliance with a decision of the United Nations Security Council taken under Chapter VII of the Charter of the United Nations, the Borrower's country prohibits any import of goods or contracting of works or services from that country, or any payments to any country, person, or entity in that country.

4.9 A Bidder shall provide such documentary evidence of eligibility satisfactory to the Purchaser, as the Purchaser shall reasonably request.

4.10 A firm that is under a sanction of debarment by the Borrower from being awarded a contract is eligible to participate in this procurement, unless the Bank, at the Borrower's request, is satisfied that the debarment;

(a) relates to fraud or corruption; and

(b) followed a judicial or administrative proceeding that afforded the firm adequate due process.

5. Eligible Goods and Related Services

5.1 All the Goods and Related Services to be supplied under the Contract and financed by the Bank may have their origin in any country in accordance with Section V, Eligible Countries.

5.2 For purposes of this ITB, the term "goods" includes commodities, raw material, machinery,

equipment, and industrial plants; and "related services" includes services such as insurance, installation, training, and initial maintenance.

5.3 The term "origin" means the country where the goods have been mined, grown, cultivated, produced, manufactured or processed; or, through manufacture, processing, or assembly, another commercially recognized article results that differs substantially in its basic characteristics from its components.

B. Contents of Request for Bids Document

6. Sections of Bidding Document

6.1 The bidding document consist of Parts 1, 2, and 3, which include all the sections indicated below, and should be read in conjunction with any addenda issued in accordance with ITB 8.

PART 1 Bidding Procedures

- Section I - Instructions to Bidders (ITB)
- Section II - Bidding Data Sheet (BDS)
- Section III - Evaluation and Qualification Criteria
- Section IV - Bidding Forms
- Section V - Eligible Countries
- Section VI - Fraud and Corruption

PART 2 Supply Requirements

- Section VII - Schedule of Requirements

PART 3 Contract

- Section VIII - General Conditions of Contract
- Section IX - Special Conditions of Contract
- Section X - Contract Forms

6.2 The Specific Procurement Notice - Request for Bids (RFB) issued by the Purchaser is not part of this bidding document.

6.3 Unless obtained directly from the Purchaser, the Purchaser is not responsible for the completeness of the document, responses to requests for

clarification, the Minutes of the pre-Bid meeting (if any), or addenda to the bidding document in accordance with ITB 8. In case of any contradiction, documents obtained directly from the Purchaser shall prevail.

6.4 The Bidder is expected to examine all instructions, forms, terms, and specifications in the bidding document and to furnish with its Bid all information or documentation as is required by the bidding document.

7. Clarification of the Bidding Document

7.1 A Bidder requiring any clarification of the bidding document shall contact the Purchaser in writing at the Purchaser's address specified **in the BDS**. The Purchaser will respond in writing to any request for clarification, provided that such request is received prior to the deadline for submission of Bids within a period specified **in the BDS.** The Purchaser shall forward copies of its response to all Bidders who have acquired the bidding document in accordance with ITB 6.3, including a description of the inquiry but without identifying its source. If so specified **in the BDS**, the Purchaser shall also promptly publish its response at the web page identified **in the BDS**. Should the clarification result in changes to the essential elements of the bidding document, the Purchaser shall amend the bidding document following the procedure under ITB 8 and ITB 22.2.

8. Amendment of Bidding Document

8.1 At any time prior to the deadline for submission of Bids, the Purchaser may amend the bidding document by issuing addenda.

8.2 Any addendum issued shall be part of the bidding document and shall be communicated in writing to all who have obtained the bidding document from the Purchaser in accordance with ITB 6.3. The Purchaser shall also promptly publish the addendum on the Purchaser's web page in accordance with ITB 7.1.

8.3 To give prospective Bidders reasonable time in which to take an addendum into account in preparing their Bids, the Purchaser may, at its

discretion, extend the deadline for the submission of Bids, pursuant to ITB 22.2.

C. Preparation of Bids

9. Cost of Bidding

9.1 The Bidder shall bear all costs associated with the preparation and submission of its Bid, and the Purchaser shall not be responsible or liable for those costs, regardless of the conduct or outcome of the Bidding process.

10. Language of Bid

10.1 The Bid, as well as all correspondence and documents relating to the Bid exchanged by the Bidder and the Purchaser, shall be written in the language specified **in the BDS.** Supporting documents and printed literature that are part of the Bid may be in another language provided they are accompanied by an accurate translation of the relevant passages into the language specified **in the BDS,** in which case, for purposes of interpretation of the Bid, such translation shall govern.

11. Documents comprising Bid

11.1 The Bid shall comprise two Parts, namely the Technical Part and the Financial Part. These two Parts shall be submitted simultaneously in two separate sealed envelopes (two-envelope Bidding process). One envelope shall contain only information relating to the Technical Part and the other, only information relating to the Financial Part. These two envelopes shall be enclosed in a separate sealed outer envelope marked "ORIGINAL BID".

11.2 The **Technical Part** shall contain the following:

(a) **Letter of Bid - Technical Part:** prepared in accordance with ITB 12;

(b) **Bid Security** or **Bid-Securing Declaration**: in accordance with ITB 19.1;

(c) **Alternative Bid - Technical Part**: if permissible in accordance with ITB 13, the Technical Part of any Alternative Bid;

(d) **Authorization**: written confirmation authorizing the signatory of the Bid to

commit the Bidder, in accordance with ITB 20.3;

(e) **Bidder's Eligibility**: documentary evidence in accordance with ITB 17 establishing the Bidder's eligibility to Bid;

(f) **Qualifications**: documentary evidence in accordance with ITB 17 establishing the Bidder's qualifications to perform the Contract if its Bid is accepted;

(g) **Eligibility of Goods and Related Services**: documentary evidence in accordance with ITB 16, establishing the eligibility of the Goods and Related Services to be supplied by the Bidder;

(h) **Conformity**: documentary evidence in accordance with ITB 16, that the Goods and Related Services conform to the bidding document;

(i) any other document **required in the BDS.**

11.3 The **Financial Part** envelope shall contain the following:

(a) **Letter of Bid – Financial Part:** prepared in accordance with ITB 12 and ITB 14;

(b) **Price Schedules**: completed prepared in accordance with ITB 12 and ITB 14;

(c) **Alternative Bid - Financial Part;** if permissible in accordance with ITB 13, the Financial Part of any Alternative Bid;

(d) any other document **required in the BDS.**

11.4 The Technical Part shall not include any financial information related to the Bid price. Where material financial information related to the Bid price is contained in the Technical Part the Bid shall be declared non-responsive.

11.5 In addition to the requirements under ITB 11.2, Bids submitted by a JV shall include a copy of the Joint Venture Agreement entered into by all members. Alternatively, a letter of intent to execute a Joint Venture Agreement in the event of a successful Bid shall be signed by all members and

submitted with the Bid, together with a copy of the proposed Agreement.

11.6 The Bidder shall furnish in the Letter of Bid information on commissions and gratuities, if any, paid or to be paid to agents or any other party relating to this Bid.

12. Letters of Bid

12.1. The Bidder shall prepare the Letter of Bid – Technical Part, and Letter of Bid – Financial Part using the relevant forms furnished in Section IV, Bidding Forms. The forms must be completed without any alterations to the text, and no substitutes shall be accepted except as provided under ITB 20.3. All blank spaces shall be filled in with the information requested.

13. Alternative Bids

13.1. Unless otherwise **specified in the BDS,** Alternative Bids shall not be considered.

14. Bid prices and Discounts

14.1 The prices and discounts quoted by the Bidder in the Letter of Bid - Financial Part and in the Price Schedules shall conform to the requirements specified below.

14.2 All lots (contracts) and items must be listed and priced separately in the Price Schedules.

14.3 The price to be quoted in the Letter of Bid - Financial Part, in accordance with ITB 12.1 shall be the total price of the Bid, excluding any discounts offered.

14.4 The Bidder shall quote any discounts and indicate the methodology for their application in the Letter of Bid - Financial Part, in accordance with ITB 12.1.

14.5 Prices quoted by the Bidder shall be fixed during the Bidder's performance of the Contract and not subject to variation on any account, unless otherwise specified **in the BDS.** A Bid submitted with an adjustable price quotation shall be treated as nonresponsive and shall be rejected, pursuant to ITB 31. However, if in accordance with the BDS, prices quoted by the Bidder shall be subject to adjustment during the performance of the Contract, a Bid submitted with a fixed price

quotation shall not be rejected, but the price adjustment shall be treated as zero.

14.6 If so specified in ITB 1.1, Bids are being invited for individual lots (contracts) or for any combination of lots (packages). Unless otherwise specified **in the BDS,** prices quoted shall correspond to 100% of the items specified for each lot and to 100% of the quantities specified for each item of a lot. Bidders wishing to offer discounts for the award of more than one Contract shall specify in their Bid the price reductions applicable to each package, or alternatively, to individual Contracts within the package. **However, discounts that are conditional on the award of more that one lot will not be considered for bid evaluation purpose**.

14.7 The terms EXW, CIP, and other similar terms shall be governed by the rules prescribed in the current edition of Incoterms, published by the International Chamber of Commerce, as specified **in the BDS.**

14.8 Prices shall be quoted as specified in each Price Schedule included in Section IV, Bidding Forms. The disaggregation of price components is required solely for the purpose of facilitating the comparison of Bids by the Purchaser. This shall not in any way limit the Purchaser's right to contract on any of the terms offered. In quoting prices, the Bidder shall be free to use transportation through carriers registered in any eligible country, in accordance with Section V, Eligible Countries. Similarly, the Bidder may obtain insurance services from any eligible country in accordance with Section V, Eligible Countries. Prices shall be entered in the following manner:

(a) For Goods manufactured in the Purchaser's Country:

(i) the price of the Goods quoted EXW (ex-works, ex-factory, ex warehouse, ex showroom, or off-the-shelf, as applicable), including all customs duties and sales and other taxes already paid or payable on the

components and raw material used in the manufacture or assembly of the Goods;

(ii) any Purchaser's Country sales tax and other taxes which will be payable on the Goods if the Contract is awarded to the Bidder; and

(iii) the price for inland transportation, insurance, and other local services required to convey the Goods to their final destination (Project Site) specified **in the BDS.**

(b) For Goods manufactured outside the Purchaser's Country, to be imported:

(i) the price of the Goods, quoted CIP named place of destination, in the Purchaser's Country, as specified **in the BDS;**

(ii) the price for inland transportation, insurance, and other local services required to convey the Goods from the named place of destination to their final destination (Project Site) specified **in the BDS;**

(c) For Goods manufactured outside the Purchaser's Country, already imported:

(i) the price of the Goods, including the original import value of the Goods; plus any mark-up (or rebate); plus any other related local cost, and custom duties and other import taxes already paid or to be paid on the Goods already imported.

(ii) the custom duties and other import taxes already paid (need to be supported with documentary evidence) or to be paid on the Goods already imported;

(iii) the price of the Goods, obtained as the difference between (i) and (ii) above;

(iv) any Purchaser's Country sales and other taxes which will be payable on

the Goods if the Contract is awarded to the Bidder; and

(v) the price for inland transportation, insurance, and other local services required to convey the Goods to their final destination (Project Site) specified **in the BDS.**

(d) for Related Services, other than inland transportation and other services required to convey the Goods to their final destination, whenever such Related Services are specified in the Schedule of Requirements:

(i) the price of each item comprising the Related Services (inclusive of any applicable taxes).

15. Currencies of Bid and Payment

15.1 The currency(ies) of the Bid and the currency(ies) of payments shall be the same. The Bidder shall quote in the currency of the Purchaser's Country the portion of the Bid price that corresponds to expenditures incurred in the currency of the Purchaser's country, unless otherwise specified **in the BDS.**

15.2 The Bidder may express the Bid price in any currency. If the Bidder wishes to be paid in a combination of amounts in different currencies, it may quote its price accordingly but shall use no more than three foreign currencies in addition to the currency of the Purchaser's Country.

16. Documents Establishing the Eligibility and Conformity of the Goods and Related Services

16.1 To establish the eligibility of the Goods and Related Services in accordance with ITB 5, Bidders shall complete the country of origin declarations in the Price Schedule Forms, included in Section IV, Bidding Forms.

16.2 To establish the conformity of the Goods and Related Services to the bidding document, the Bidder shall furnish as part of its Bid the documentary evidence that the Goods conform to the technical specifications and standards specified in Section VII, Schedule of Requirements.

16.3 The documentary evidence may be in the form of literature, drawings or data, and shall consist of a

detailed item by item description of the essential technical and performance characteristics of the Goods and Related Services, demonstrating substantial responsiveness of the Goods and Related Services to the technical specification, and if applicable, a statement of deviations and exceptions to the provisions of the Section VII, Schedule of Requirements.

16.4 The Bidder shall also furnish a list giving full particulars, including available sources and current prices of spare parts, special tools, etc., necessary for the proper and continuing functioning of the Goods during the period specified **in the BDS** following commencement of the use of the goods by the Purchaser.

16.5 Standards for workmanship, process, material, and equipment, as well as references to brand names or catalogue numbers specified by the Purchaser in the Schedule of Requirements, are intended to be descriptive only and not restrictive. The Bidder may offer other standards of quality, brand names, and/or catalogue numbers, provided that it demonstrates, to the Purchaser's satisfaction, that the substitutions ensure substantial equivalence or are superior to those specified in the Section VII, Schedule of Requirements.

17. Documents Establishing the Eligibility and Qualifications of the Bidder

17.1 To establish Bidder's eligibility in accordance with ITB 4, Bidders shall complete the Letter of Bid – Technical Part, included in Section IV, Bidding Forms.

17.2 The documentary evidence of the Bidder's qualifications to perform the Contract, if its Bid is accepted, shall establish to the Purchaser's satisfaction:

(a) that, if required **in the BDS**, a Bidder that does not manufacture or produce the Goods it offers to supply shall submit the Manufacturer's Authorization using the form included in Section IV, Bidding Forms to demonstrate that it has been duly authorized by the manufacturer or producer of the Goods

to supply these Goods in the Purchaser's Country;

(b) that, if required **in the BDS**, in case of a Bidder not doing business within the Purchaser's Country, the Bidder is or will be (if awarded the Contract) represented by an Agent in the country equipped and able to carry out the Supplier's maintenance, repair and spare parts-stocking obligations prescribed in the Conditions of Contract and/or Technical Specifications; and

(c) that the Bidder meets each of the qualification criterion specified in Section III, Evaluation and Qualification Criteria.

18. Period of Validity of Bids

18.1. Bids shall remain valid until the date **specified in the BDS** or any extended date if amended by the Purchaser in accordance with ITB 8. A Bid that is not valid until the date **specified in the BDS**, or any extended date if amended by the Purchaser in accordance with ITB 8, shall be rejected by the Purchaser as nonresponsive.

18.2. In exceptional circumstances, prior to the expiry of the Bid validity, the Purchaser may request Bidders to extend the period of validity of their Bids. The request and the responses shall be made in writing. If a Bid Security is requested (in accordance with ITB 19), it shall also be extended for a corresponding period. A Bidder may refuse the request without forfeiting its Bid Security. A Bidder granting the request shall not be required or permitted to modify its Bid, except as provided in ITB 18.3.

18.3. If the award is delayed by a period exceeding fifty-six (56) days beyond the expiry of the initial Bid validity, the Contract price shall be determined as follows:

(a) In the case of fixed price contracts, the Contract price shall be the Bid price adjusted by the factor **specified in the BDS**.

(b) In the case of adjustable price contracts, no adjustment shall be made.

(c) In any case, Bid evaluation shall be based on the Bid price without taking into

consideration the applicable correction from those indicated above.

19. Bid Security

19.1. The Bidder shall furnish, as part of the Technical Part of its Bid, either a Bid-Securing Declaration or a Bid Security, as specified **in the BDS,** in original form and, in the case of a Bid security**,** in the amount and currency specified **in the BDS.**

19.2. A Bid Securing Declaration shall use the form included in Section IV, Bidding Forms.

19.3. If a Bid Security is specified pursuant to ITB 19.1, the Bid security shall be a demand guarantee in any of the following forms at the Bidder's option:

(a) an unconditional guarantee issued by a bank or non-bank financial institution (such as an insurance, bonding or surety company);

(b) an irrevocable letter of credit;

(c) a cashier's or certified check; or

(d) another security **specified in the BDS**,

from a reputable source from an eligible country. If an unconditional guarantee is issued by a non-bank financial institution located outside the Purchaser's Country the issuing non-bank financial institution shall have a correspondent financial institution located in the Purchaser's Country to make it enforceable unless the Purchaser has agreed in writing, prior to Bid submission, that a correspondent financial institution is not required. In the case of a bank guarantee, the Bid security shall be submitted either using the Bid Security Form included in Section IV, Bidding Forms, or in another substantially similar format approved by the Purchaser prior to Bid submission. The Bid security shall be valid for twenty-eight (28) days beyond the original date of expiry of the Bid validity, or beyond any extended date if requested under ITB 18.2.

19.4. If a Bid Security is specified pursuant to ITB 19.1, any Bid not accompanied by a substantially responsive Bid Security shall be rejected by the Purchaser as non-responsive.

19.5. If a Bid Security is specified pursuant to ITB 19.1, the Bid Security of unsuccessful Bidders shall be returned as promptly as possible upon the successful Bidder's signing the contract and furnishing the Performance Security pursuant to ITB 49.

19.6. The Bid Security of the successful Bidder shall be returned as promptly as possible once the successful Bidder has signed the Contract and furnished the required performance security.

19.7. The Bid Security may be forfeited:

(a) if a Bidder withdraws its Bid prior to the expiry date of Bid validity specified by the Bidder on the Letter of Bid or any extended date provided by the Bidder ; or

(b) if the successful Bidder fails to:

(i) sign the Contract in accordance with ITB 48; or

(ii) furnish a performance security in accordance with ITB 49.

19.8. The Bid Security or Bid-Securing Declaration of a JV must be in the name of the JV that submits the Bid. If the JV has not been legally constituted into a legally enforceable JV at the time of Bidding, the Bid security or Bid-Securing Declaration shall be in the names of all future members as named in the letter of intent referred to in ITB 4.1 and ITB 11.5.

19.9. If a Bid security is **not required in the BDS**, pursuant to ITB 19.1, and

(a) if a Bidder withdraws its Bid during the period of Bid validity specified by the Bidder on the Letter of Bid, or any extended date provided by the Bidder, or

(b) if the successful Bidder fails to: sign the Contract in accordance with ITB 48; or furnish a performance security in accordance with ITB 49;

the Borrower may, **if provided for in the BDS**, declare the Bidder ineligible to be awarded a

contract by the Purchaser for a period of time **as stated in the BDS**.

20. Format and Signing of Bid

20.1 The Bidder shall prepare the Bid, in accordance with ITB 11 and ITB 21.

20.2 Bidders shall mark as "CONFIDENTIAL" information in their Bids which is confidential to their business. This may include proprietary information, trade secrets, or commercial or financially sensitive information.

20.3 The original and all copies of the Bid shall be typed or written in indelible ink and shall be signed by a person duly authorized to sign on behalf of the Bidder. This authorization shall consist of a written confirmation **as** specified **in the BDS** and shall be attached to the Bid. The name and position held by each person signing the authorization must be typed or printed below the signature. All pages of the Bid where entries or amendments have been made shall be signed or initialed by the person signing the Bid.

20.4 In case the Bidder is a JV, the Bid shall be signed by an authorized representative of the JV on behalf of the JV, and so as to be legally binding on all the members as evidenced by a power of attorney signed by their legally authorized representatives.

20.5 Any inter-lineation, erasures, or overwriting shall be valid only if they are signed or initialed by the person signing the Bid.

D. Submission of Bids

21. Sealing and Marking of Bids

21.1 The Bidder shall deliver the Bid in two separate, sealed **envelopes** (the Technical Part and the Financial Part). These two envelopes shall be enclosed in a sealed outer envelope marked "ORIGINAL BID".

21.2 In addition, the Bidder shall submit copies of the Bid in the number specified **in the BDS**. Copies of the Technical Part shall be placed in a separate sealed envelope marked "COPIES: TECHNICAL PART". Copies of the Financial Part shall be placed in a separate sealed envelope marked "COPIES: FINANCIAL PART". The Bidder shall place both of these envelopes in a separate, sealed outer envelope

marked "BID COPIES". In the event of any discrepancy between the original and the copies, the original shall prevail. If alternative Bids are permitted in accordance with ITB 13, the alternative Bids shall be submitted as follows: the original of the alternative Bid Technical Part shall be placed in a sealed envelope marked "ALTERNATIVE BID – TECHNICAL PART" and the Financial Part shall be placed in a sealed envelope marked "ALTERNATIVE BID – FINANCIAL PART" and these two separate sealed envelopes then enclosed within a sealed outer envelope marked "ALTERNATIVE BID – ORIGINAL", the copies of the alternative Bid will be placed in separate sealed envelopes marked "ALTERNATIVE BID – COPIES OF TECHNICAL PART", and "ALTERNATIVE BID – COPIES OF FINANCIAL PART" and enclosed in a separate sealed outer envelope marked "ALTERNATIVE BID - COPIES".

21.3 The envelopes marked "ORIGINAL BID" and "BID COPIES" (and, if appropriate, a third envelope marked "ALTERNATIVE BID") shall be enclosed in a separate sealed outer envelope for submission to the Purchaser.

21.4 All inner and outer envelopes, shall:

(a) bear the name and address of the Bidder;

(b) be addressed to the Purchaser in accordance with ITB 22.1;

(c) bear the specific identification of this Bidding process indicated in ITB 1.1; and

(d) bear a warning not to open before the time and date for Bid opening.

21.5 If all envelopes are not sealed and marked as required, the Purchaser will assume no responsibility for the misplacement or premature opening of the Bid.

22. Deadline for Submission of Bids

22.1. Bids must be received by the Purchaser at the address and no later than the date and time specified **in the BDS.** When so specified **in the BDS**, Bidders shall have the option of submitting their Bids electronically. Bidders submitting Bids

electronically shall follow the electronic Bid submission procedures specified **in the BDS**.

22.2. The Purchaser may, at its discretion, extend the deadline for the submission of Bids by amending the bidding document in accordance with ITB 8, in which case all rights and obligations of the Purchaser and Bidders previously subject to the deadline shall thereafter be subject to the deadline as extended.

23. Late Bids

23.1. The Purchaser shall not consider any Bid that arrives after the deadline for submission of Bids, in accordance with ITB 22. Any Bid received by the Purchaser after the deadline for submission of Bids shall be declared late, rejected, and returned unopened to the Bidder.

24. Withdrawal, Substitution, and Modification of Bids

24.1. A Bidder may withdraw, substitute, or modify its Bid after it has been submitted by sending a written notice, duly signed by an authorized representative, and shall include a copy of the authorization (the power of attorney) in accordance with ITB 20.3, (except that withdrawal notices do not require copies). The corresponding substitution or modification of the Bid must accompany the respective written notice. All notices must be:

(a) prepared and submitted in accordance with ITB 20 and ITB 21 (except that withdrawal notices do not require copies), and in addition, the respective envelopes shall be clearly marked "WITHDRAWAL," "SUBSTITUTION," or "MODIFICATION;" and

(b) received by the Purchaser prior to the deadline prescribed for submission of Bids, in accordance with ITB 22.

24.2. Bids requested to be withdrawn in accordance with ITB 24.1 shall be returned unopened to the Bidders.

24.3. No Bid may be withdrawn, substituted, or modified in the interval between the deadline for submission of Bids and the expiration of the period of Bid validity specified by the Bidder on the Letter of Bid -Technical Part and repeated in

the Letter of Bid - Financial Part, or any extension thereof.

E. Public Opening of Technical Parts of Bids

25. Public Opening of Technical Parts of Bids

25.1. Except as in the cases specified in ITB 23 and ITB 24.2, the Purchaser shall, at this Bid opening, publicly open and read out, in accordance with this ITB, all bids received by the deadline at the date, time and place specified **in the BDS** in the presence of Bidders' designated representatives and anyone who chooses to attend. Any specific electronic Bid opening procedures required if electronic Bidding is permitted in accordance with ITB 22.1, shall be as specified **in the BDS.**

25.2. First, the written notice of withdrawal in the envelopes marked "WITHDRAWAL" shall be opened and read out and the envelope with the corresponding Bid shall not be opened, but returned to the Bidder. If the withdrawal envelope does not contain a copy of the "power of attorney" confirming the signature as a person duly authorized to sign on behalf of the Bidder, the corresponding Bid will be opened. No Bid withdrawal shall be permitted unless the corresponding withdrawal notice contains a valid authorization to request the withdrawal and is read out at Bid opening.

25.3. Next, envelopes marked "SUBSTITUTION" shall be opened and read out and exchanged with the corresponding Bid being substituted, and the substituted Bid shall not be opened, but returned to the Bidder. No Bid substitution shall be permitted unless the corresponding substitution notice contains a valid authorization to request the substitution and is read out at Bid opening.

25.4. Next, envelopes marked "MODIFICATION" shall be opened and read out with the corresponding Bid. No Bid modification shall be permitted unless the corresponding modification notice contains a valid authorization to request the modification and is read out at Bid opening. Only Bids that are opened and read out at Bid opening shall be considered further.

25.5. Next, all other envelopes marked "TECHNICAL PART" shall be opened one at a time. All envelopes marked "FINANCIAL PART" shall remain sealed, and kept by the Purchaser in safe custody until they are opened, at a later public opening, following the evaluation of the Technical Part of the Bids. On opening the envelopes marked "TECHNICAL PART" the Purchaser shall read out: the name of the Bidder and whether there is a modification; and Alternative Bid the presence or absence of a Bid Security, if required and any other details as the Purchaser may consider appropriate.

25.6. Only Technical Parts of Bids and Alternative Bid - Technical Parts that are read out at Bid opening shall be considered further in the evaluation. The Letter of Bid – Technical Part and the separate sealed envelope marked "FINANCIAL PART" are to be initialed by representatives of the Purchaser attending Bid opening in the manner specified **in the BDS.**

25.7. At the Bid opening the Purchaser shall neither discuss the merits of any Bid nor reject any Bid (except for late Bids, in accordance with ITB 23.1).

25.8. Following the opening of the Technical Parts of the Bid the Purchaser shall prepare a record that shall include, as a minimum:

(a) the name of the Bidder and whether there is a withdrawal, substitution, or modification;

(b) the presence or absence of a duly sealed envelope marked "FINANCIAL PART";

(c) the presence or absence of a Bid Security or Bid-Securing Declaration; and

(d) if applicable, any Alternative Bid - Technical Part;

25.9. The Bidders' representatives who are present shall be requested to sign the record. The omission of a Bidder's signature on the record shall not invalidate the contents and effect of the record. A copy of the record shall be distributed to all Bidders.

F. Evaluation of Bids - General Provisions

26. Confidentiality

26.1 Information relating to the evaluation of the Technical Part shall not be disclosed to Bidders or any other persons not officially concerned with the Bidding process until the notification of evaluation of the Technical Part in accordance with ITB 33. Information relating to the evaluation of Financial Part, the evaluation of combined Technical Part and Financial Part, and recommendation of contract award shall not be disclosed to Bidders or any other persons not officially concerned with the RFB process until the Notification of Intention to Award the Contract is transmitted to Bidders in accordance with ITB 43.

26.2 Any effort by a Bidder to influence the Purchaser in the evaluation or contract award decisions may result in the rejection of its Bid.

26.3 Notwithstanding ITB 26.2, from the time of Bid opening to the time of Contract Award, if any Bidder wishes to contact the Purchaser on any matter related to the Bidding process, it should do so in writing.

27. Clarification of Bids

27.1 To assist in the examination, evaluation, comparison of the Bids, and qualification of the Bidders, the Purchaser may, at its discretion, ask any Bidder for a clarification of its Bid. Any clarification submitted by a Bidder in respect to its Bid and that is not in response to a request by the Purchaser shall not be considered. The Purchaser's request for clarification and the response shall be in writing. No change, including any voluntary increase or decrease, in the prices or substance of the Bid shall be sought, offered, or permitted, except to confirm the correction of arithmetic errors discovered by the Purchaser in the Evaluation of the Bids, in accordance with ITB 35.

27.2 If a Bidder does not provide clarifications of its Bid by the date and time set in the Purchaser's request for clarification, its Bid may be rejected.

28. Deviations, Reservations, and Omissions

28.1 During the evaluation of Bids, the following definitions apply:

(a) "Deviation" is a departure from the requirements specified in the bidding document;

(b) "Reservation" is the setting of limiting conditions or withholding from complete acceptance of the requirements specified in the bidding document; and

28.2 "Omission" is the failure to submit part or all of the information or documentation required in the bidding document.

29. Nonconformities, Errors and Omissions

29.1 Provided that a Bid is substantially responsive, the Purchaser may waive any nonconformities in the Bid.

29.2 Provided that a Bid is substantially responsive, the Purchaser may request that the Bidder submit the necessary information or documentation, within a reasonable period of time, to rectify nonmaterial nonconformities or omissions in the Bid related to documentation requirements. Such omission shall not be related to any aspect of the price of the Bid. Failure of the Bidder to comply with the request may result in the rejection of its Bid.

G. Evaluation of Technical Parts of Bids

30. Evaluation of Technical Parts

30.1 In evaluating the Technical Parts of each Bid, the Purchaser shall use the criteria and methodologies listed in ITB 31, ITB 32, the BDS, if applicable, and Section III, Evaluation and Qualification Criteria. No other evaluation criteria or methodologies shall be permitted.

31. Determination of Responsiveness

31.1 The Purchaser's determination of a Bid's responsiveness is to be based on the contents of the Bid itself, as defined in ITB 11. A substantially responsive Bid is one that meets the requirements of the bidding document without material deviation, reservation, or omission. A material deviation, reservation, or omission is one that:

(a) if accepted, would:

(i) affect in any substantial way the scope, quality, or performance of the Goods and Related Services specified in the Contract; or

(ii) limit in any substantial way, inconsistent with the bidding document, the Purchaser's rights or the Bidder's obligations under the Contract; or

(b) if rectified, would unfairly affect the competitive position of other Bidders presenting substantially responsive Bids.

31.2 The Purchaser shall examine the technical aspects of the Bid submitted in accordance with ITB 16 and ITB 17, in particular, to confirm that all requirements of Section VII, Schedule of Requirements have been met without any material deviation or reservation, or omission.

31.3 If a Bid is not substantially responsive to the requirements of bidding document, it shall be rejected by the Purchaser and may not subsequently be made responsive by correction of the material deviation, reservation, or omission.

32. Qualification of the Bidders and Detailed Evaluation of the Technical Part

32.1 The Purchaser shall determine, to its satisfaction, whether all eligible Bidders, whose Bids have been determined to be substantially responsive to the bidding document, meet the Qualification Criteria specified in Section III, Evaluation and Qualification Criteria.

32.2 The determination shall be based upon an examination of the documentary evidence of the Bidder's qualifications submitted by the Bidder, pursuant to ITB 17. The determination shall not take into consideration the qualifications of other firms such as the Bidder's subsidiaries, parent entities, affiliates, subcontractors (other than specialized subcontractors if permitted in the bidding document), or any other firm different from the Bidder.

32.3 Prior to Contract award, the Purchaser will verify that the successful Bidder (including each member of a JV) is not disqualified by the Bank due to noncompliance with contractual SEA/SH

prevention and response obligations. The Purchaser will conduct the same verification for each subcontractor proposed by the successful Bidder. If any proposed subcontractor does not meet the requirement, the Purchaser will require the Bidder to propose a replacement subcontractor.

32.4 Only substantially responsive bids submitted by eligible and qualified bidders shall proceed to the detailed technical evaluation to assess adequacy of the Technical Part followed by evaluation applying technical factors/subfactors and corresponding scores as specified in the BDS.

H. Notification of Evaluation of Technical Parts and Public Opening of Financial Parts of Bids

33. Notification of Evaluation of Technical Parts and Public Opening of Financial Parts

33.1 Following the completion of the evaluation of the Technical Parts of the Bids, and the Bank has issued its no objection (if applicable), the Purchaser shall notify in writing those Bidders who have failed to meet the Qualification Criteria and/or whose Bids were considered non-responsive to the requirements in the bidding document, advising them of the following information:

(a) the grounds on which their Technical Part of Bid failed to meet the requirements of the bidding document;

(b) their envelope marked "FINANCIAL PART" will be returned to them unopened after the completion of the bid evaluation process and the signing of the Contract;

(c) notify them of the date, time and location of the public opening of the envelopes marked 'FINANCIAL PART".

33.2 The Purchaser shall, simultaneously, notify in writing those Bidders whose Technical Parts have been evaluated as substantially responsive to the bidding document and met the Qualification Criteria, advising them of the following information:

(a) their Bid has been evaluated as substantially responsive to the bidding

document and met the Qualification Criteria; and

(b) their envelope marked "FINANCIAL PART" will be opened at the public opening of Financial Parts;

(c) notify them of the date, time and location of the public opening of the envelopes marked "FINANCIAL PART".

33.3 The opening date shall be not less than ten (10) Business Days from the date of notification of the results of the technical evaluation, specified in ITB 33.1 and 33.2. However, if the Purchaser receives a complaint on the results of the technical evaluation within the ten (10) Business Days, the opening date shall be subject to ITB 50.1. The Financial Part of the Bid shall be opened publicly in the presence of Bidders' designated representatives and anyone who chooses to attend.

33.4 At this public opening the Financial Parts will be opened by the Purchaser in the presence of Bidders, or their designated representatives and anyone else who chooses to attend. Bidders who met the Qualification Criteria and whose Bids were evaluated as substantially responsive will have their envelopes marked "FINANCIAL PART" opened at the second public opening. Each of these envelopes marked "FINANCIAL PART" shall be inspected to confirm that they have remained sealed and unopened. These envelopes shall then be opened by the Purchaser. The Purchaser shall read out the names of each Bidder, the technical score and the total Bid prices, per lot (contract) if applicable, including any discounts and Alternative Bid - Financial Part, and any other details as the Purchaser may consider appropriate.

33.5 Only envelopes of Financial Part of Bids, Financial Parts of Alternative Bids and discounts that are opened and read out at Bid opening shall be considered further for evaluation. The Letter of Bid - Financial Part and the Price Schedules are to be initialed by a representative of the Purchaser attending the Bid opening in the manner specified **in the BDS**.

33.6 The Purchaser shall neither discuss the merits of any Bid nor reject any envelopes marked "FINANCIAL PART".

33.7 The Purchaser shall prepare a record of the Financial Part of the Bid opening that shall include, as a minimum:

(a) the name of the Bidder whose Financial Part was opened;

(b) the Bid price, per lot (contract) if applicable, including any discounts,

(c) if applicable, any Alternative Bid - Financial Part.

33.8 The Bidders whose envelopes marked 'FINANCIAL PART" have been opened or their representatives who are present shall be requested to sign the record. The omission of a Bidder's signature on the record shall not invalidate the contents and effect of the record. A copy of the record shall be distributed to all Bidders.

I. Evaluation of Financial Parts of Bids

34. Evaluation of Financial Parts

34.1 Provided that a Bid is substantially responsive, the Purchaser shall rectify quantifiable nonmaterial nonconformities related to the Bid Price. To this effect, the Bid Price shall be adjusted, for comparison purposes only, to reflect the price of a missing or non-conforming item or component, by adding the average price of the item or component quoted by substantially responsive Bidders. If the price of the item or component cannot be derived from the price of other substantially responsive Bids, the Purchaser shall use its best estimate.

34.2 To evaluate the Financial Part of each Bid, the Purchaser shall consider the following:

(a) evaluation will be done for Items or Lots (contracts), as specified **in the BDS;** and the Bid Price as quoted in accordance with ITB 14;

(b) price adjustment for correction of arithmetic errors in accordance with ITB 35.1;

(c) price adjustment due to discounts offered in accordance with ITB 14.4;

(d) converting the amount resulting from applying (a) to (c) above, if relevant, to a single currency in accordance with ITB 36;

(e) price adjustment due to quantifiable nonmaterial nonconformities in accordance with ITB 34.1; and

(f) the additional evaluation factors specified in Section III, Evaluation and Qualification Criteria.

34.3 The estimated effect of the price adjustment provisions of the Conditions of Contract, applied over the period of execution of the Contract, shall not be taken into account in Bid evaluation.

34.4 If this bidding document allows Bidders to quote separate prices for different lots (contracts), each lot will be evaluated separately to determine the Most Advantageous Bid using the methodology specified in Section III, Evaluation and Qualification Criteria. **Discounts that are conditional on the award of more than one lot or slice shall not be considered for Bid evaluation**.

34.5 The Purchaser's evaluation of a Bid will exclude and not take into account:

(a) in the case of Goods manufactured in the Purchaser's Country, sales and other similar taxes, which will be payable on the goods if a contract is awarded to the Bidder;

(b) in the case of Goods manufactured outside the Purchaser's Country, already imported or to be imported, customs duties and other import taxes levied on the imported Good, sales and other similar taxes, which will be payable on the Goods if the contract is awarded to the Bidder;

(c) any allowance for price adjustment during the period of execution of the contract, if provided in the Bid.

34.6 The Purchaser's evaluation of a Bid may require the consideration of other factors, in addition to the Bid price quoted in accordance with ITB 14.

These factors may be related to the characteristics, performance, and terms and conditions of purchase of the Goods and Related Services. The effect of the factors selected, if any, shall be expressed in monetary terms to facilitate comparison of Bids, unless otherwise specified **in the BDS** from amongst those set out in Section III, Evaluation and Qualification Criteria. The criteria and methodologies to be used shall be as specified in ITB 34.2 (f).

35. Correction of Arithmetic Errors

35.1 In evaluating the Financial Part of each Bid, the Purchaser shall correct arithmetic errors on the following basis:

(a) if there is a discrepancy between the unit price and the line item total that is obtained by multiplying the unit price by the quantity, the unit price shall prevail and the line item total shall be corrected, unless in the opinion of the Purchaser there is an obvious misplacement of the decimal point in the unit price, in which case the line item total as quoted shall govern and the unit price shall be corrected;

(b) if there is an error in a total corresponding to the addition or subtraction of subtotals, the subtotals shall prevail and the total shall be corrected; and

(c) if there is a discrepancy between words and figures, the amount in words shall prevail, unless the amount expressed in words is related to an arithmetic error, in which case the amount in figures shall prevail subject to (a) and (b) above.

35.2 Bidders shall be requested to accept correction of arithmetic errors. Failure to accept the correction in accordance with ITB 35.1, shall result in the rejection of the Bid.

36. Conversion to Single Currency

36.1 For evaluation and comparison purposes, the currency(ies) of the Bids shall be converted in a single currency as specified **in the BDS.**

37. Margin of Preference

37.1 Unless otherwise specified **in the BDS,** a margin of preference shall not apply.

38. Comparison of Financial Parts

38.1 The Purchaser shall compare the evaluated costs of the Bids to determine the Bid that has the lowest evaluated cost. The comparison shall be on the basis of CIP (place of final destination) prices for imported goods and EXW prices, plus cost of inland transportation and insurance to place of destination, for goods manufactured within the Borrower's country, together with prices for any required installation, training, commissioning and other services. The evaluation of prices shall not take into account custom duties and other taxes levied on imported goods quoted CIP and sales and similar taxes levied in connection with the sale or delivery of goods.

39. Abnormally Low Bids

39.1 An Abnormally Low Bid is one where the Bid price, in combination with other elements of the Bid, appears so low that it raises material concerns with the Purchaser as to the capability of the Bidder to perform the Contract for the offered Bid Price.

39.2 In the event of identification of a potentially Abnormally Low Bid, the Purchaser shall seek written clarification from the Bidder, including a detailed price analyses of its Bid price in relation to the subject matter of the contract, scope, delivery schedule, allocation of risks and responsibilities and any other requirements of the bidding document.

39.3 After evaluation of the price analyses, in the event that the Purchaser determines that the Bidder has failed to demonstrate its capability to perform the contract for the offered Bid price, the Purchaser shall reject the Bid.

J. Evaluation of Combined Technical and Financial Parts, Most Advantageous Bid and Notification of Intention to Award

40. Evaluation of combined Technical and Financial Parts

40.1 The Purchaser's evaluation of responsive Bids will take into account technical factors, in addition to cost factors in accordance with Section III Evaluation and Qualification Criteria. The weight to be assigned for the Technical factors and cost is specified **in the BDS**. The Purchaser will rank the Bids based on the evaluated Bid score (B).

40.2 The Purchaser will determine the Most Advantageous Bid. The Most Advantageous Bid is the Bid of the Bidder that meets the Qualification Criteria and whose Bid has been determined to be substantially responsive to the Bidding document and is the Bid with the highest combined technical and financial score.

41. Purchaser's Right to Accept Any Bid, and to Reject Any or All Bids

41.1 The Purchaser reserves the right to accept or reject any Bid, and to annul the Bidding process and reject all Bids at any time prior to Contract Award, without thereby incurring any liability to Bidders. In case of annulment, all Bids submitted and specifically, Bid securities, shall be promptly returned to the Bidders.

42. Standstill Period

42.1 The Contract shall not be awarded earlier than the expiry of the Standstill Period. The Standstill Period shall be ten (10) Business Days unless extended in accordance with ITB 47. The Standstill Period commences the day after the date the Purchaser has transmitted to each Bidder the Notification of Intention to Award the Contract. Where only one Bid is submitted, or if this contract is in response to an emergency situation recognized by the Bank, the Standstill Period shall not apply.

43. Notification of Intention to Award

43.1 The Purchaser shall send to each Bidder (that has not already been notified that it has been unsuccessful) the Notification of Intention to Award the Contract to the successful Bidder. The Notification of Intention to Award shall contain, at a minimum, the following information:

(a) the name and address of the Bidder submitting the successful Bid;

(b) the Contract price of the successful Bid;

(c) the total combined score of the successful Bidder;

(d) the names of all Bidders who submitted Bids, and their Bid prices as readout, and as evaluated and technical scores;

(e) a statement of the reason(s) the Bid (of the unsuccessful Bidder to whom the notification is addressed) was unsuccessful;

(f) the expiry date of the Standstill Period;

(g) instructions on how to request a debriefing and/or submit a complaint during the standstill period.

K. Award of Contract

44. Award Criteria

44.1 Subject to ITB 41, the Purchaser shall award the Contract to the successful Bidder. This is the Bidder whose Bid has been determined to be the Most Advantageous Bid as specified in ITB 40.

45. Purchaser's Right to Vary Quantities at Time of Award

45.1 At the time the Contract is awarded, the Purchaser reserves the right to increase or decrease the quantity of Goods and Related Services originally specified in Section VII, Schedule of Requirements, provided this does not exceed the percentages **specified in the BDS,** and without any change in the unit prices or other terms and conditions of the Bid and the bidding document.

46. Notification of Award

46.1 Prior to the date of expiry of the Bid validity and upon expiry of the Standstill Period, specified in ITB 42.1 or any extension thereof, and upon satisfactorily addressing any complaint that has been filed within the Standstill Period, the Purchaser shall notify the successful Bidder, in writing, that its Bid has been accepted. The notification of award (hereinafter and in the Contract Forms called the "Letter of Acceptance") shall specify the sum that the Purchaser will pay the Supplier in consideration of the execution of the Contract (hereinafter and in the Conditions of Contract and Contract Forms called "the Contract Price").

46.2 Within ten (10) Business Days after the date of transmission of the Letter of Acceptance, the Purchaser shall publish the Contract Award Notice which shall contain, at a minimum, the following information:

(a) name and address of the Purchaser;

(b) name and reference number of the contract being awarded, and the selection method used;

(c) names of all Bidders that submitted Bids, and their Bid prices as read out at Bid opening, and as evaluated;

(d) names of all Bidders whose Bids were rejected either as nonresponsive or as not meeting qualification criteria, or were not evaluated, with the reasons therefor;

(e) the name of the successful Bidder, the final total contract price, the contract duration and a summary of its scope; and

(f) successful Bidder's Beneficial Ownership Disclosure Form.

46.3 The Contract Award Notice shall be published on the Purchaser's website with free access if available, or in at least one newspaper of national circulation in the Purchaser's Country, or in the official gazette. The Purchaser shall also publish the contract award notice in UNDB online.

46.4 Until a formal Contract is prepared and executed, the Letter of Acceptance shall constitute a binding Contract.

47. Debriefing by the Purchaser

47.1 On receipt of the Purchaser's Notification of Intention to Award referred to in ITB 43.1, an unsuccessful Bidder has three (3) Business Days to make a written request to the Purchaser for a debriefing. The Purchaser shall provide a debriefing to all unsuccessful Bidders whose request is received within this deadline.

47.2 Where a request for debriefing is received within the deadline, the Purchaser shall provide a debriefing within five (5) Business Days, unless the Purchaser decides, for justifiable reasons, to provide the debriefing outside this timeframe. In

that case, the standstill period shall automatically be extended until five (5) Business Days after such debriefing is provided. If more than one debriefing is so delayed, the standstill period shall not end earlier than five (5) Business Days after the last debriefing takes place. The Purchaser shall promptly inform, by the quickest means available, all Bidders of the extended standstill period

47.3 Where a request for debriefing is received by the Purchaser later than the three (3) Business Day deadline, the Purchaser should provide the debriefing as soon as practicable, and normally no later than fifteen (15) Business Days from the date of publication of Public Notice of Award of contract. Requests for debriefing received outside the three (3) day deadline shall not lead to extension of the standstill period.

47.4 Debriefings of unsuccessful Bidders may be done in writing or verbally. The Bidders shall bear their own costs of attending such a debriefing meeting.

48. Signing of Contract

48.1 The Purchaser shall send to the successful Bidder the Letter of Acceptance including the Contract Agreement, and a request to submit the Beneficial Ownership Disclosure Form providing additional information on its beneficial ownership. The Beneficial Ownership Disclosure Form shall be submitted within eight (8) Business Days of receiving this request.

48.2 The successful Bidder shall sign, date and return to the Purchaser, the Contract Agreement within twenty-eight (28) days of its receipt.

48.3 Notwithstanding ITB 48.2 above, in case signing of the Contract Agreement is prevented by any export restrictions attributable to the Purchaser, to the country of the Purchaser, or to the use of the products/goods, systems or services to be supplied, where such export restrictions arise from trade regulations from a country supplying those products/goods, systems or services, the Bidder shall not be bound by its Bid, always provided however, that the Bidder can demonstrate to the satisfaction of the Purchaser and of the Bank that

signing of the Contact Agreement has not been prevented by any lack of diligence on the part of the Bidder in completing any formalities, including applying for permits, authorizations and licenses necessary for the export of the products/goods, systems or services under the terms of the Contract.

49. Performance Security

49.1 Within twenty-eight (28) days of the receipt of the Letter of Acceptance from the Purchaser, the successful Bidder, if required, shall furnish the Performance Security in accordance with the GCC 18 using for that purpose the Performance Security Form included in Section X, Contract Forms, or another Form acceptable to the Purchaser. If the Performance Security furnished by the successful Bidder is in the form of a bond, it shall be issued by a bonding or insurance company that has been determined by the successful Bidder to be acceptable to the Purchaser. A foreign institution providing a bond shall have a correspondent financial institution located in the Purchaser's Country, unless the Purchaser has agreed in writing that a correspondent financial institution is not required.

49.2 Failure of the successful Bidder to submit the above-mentioned Performance Security or sign the Contract shall constitute sufficient grounds for the annulment of the award and forfeiture of the Bid Security. In that event the Purchaser may award the Contract to the Bidder offering the Most Advantageous Bid.

50. Procurement Related Complaint

50.1 The procedures for making a Procurement-related Complaint are as specified in the BDS.

Section II - Bid Data Sheet (BDS)

The following specific data for the Goods to be procured shall complement, supplement, and/or amend the provisions in the Instructions to Bidders (ITB). Whenever there is a conflict, the provisions herein shall prevail over those in ITB.

ITB Reference	A. General
ITB 1.1	The reference number of the Request for Bids (RFB) is : ***PK-HESCO-GOODS-APMS -ICB/10*** The Purchaser is: **Hyderabad Electric Supply Company (HESCO)** The name of the RFB is: *Supply & Installation of 8,600 Nos. Asset Performance Management System (APMS) (Ordering Code:* **APMS-MC-S**) *on Distribution Transformers Of 200KVA (3500 Nos.) and 100kVA (5,100 Nos.) Ratings within the jurisdiction of HESCO.*
ITB 1.2(a)	**Electronic-Procurement System** Not Applicable
ITB 2.1	The Borrower is: **Islamic Republic Of Pakistan** Implementing agency: **Hyderabad Electric Supply Company (HESCO), Ministry of Energy (Power Division)** Loan or Financing Agreement details/amount: a) **Agreement No IBRD – 93180** b) **Loan Amount - $195 Millions** c) **Loan Amount with HESCO as per Financing Agreement- $45.65 Millions** The name of the Project is: **Electricity Distribution Efficiency Improvement Project (EDEIP)**
ITB 4.1	Maximum number of members in the Joint Venture (JV) shall be: **Three (03)**
ITB 4.5	A list of debarred firms and individuals is available on the Bank's external website: http://www.worldbank.org/debarr.
	B. Contents of Bidding Document
ITB 7.1	For **Clarification of Bid purposes** only, the Purchaser's address is: Attention: Chief Engineer (Development)PMU HESCO

	Address: Bungalow # A-1 HESCO Power Colony Hussainabad, Hyderabad. City: Hyderabad Country: Pakistan Telephone: +92-22-9260070 Facsimile number: +92-22-9260525 Electronic mail address: cedevhesco@gmail.com, cepmu@hesco.gov.pk Requests for clarification should be received by the Purchaser no later than: ***07 days before bid opening.*** Web page: ***www.hesco.com.pk*** ***A pre-bid meeting has been held on 11-06-2026 at 11.00AM*** ***The firm may participate online through Zoom, the link will be shared upon request received from the firm on the email provided in the bidding documents***
	C. Preparation of Bids
ITB 10.1	The language of the Bid is: ***"English"***. All correspondence exchange shall be in' English' language. Language for translation of supporting documents and printed literature is English
ITB 11.2 (i) & 11.3 (d)	None
ITB 13.1	Alternative Bids **shall not be** considered.
ITB 14.5	The prices quoted by the Bidder ***shall not*** be subject to adjustment during the performance of the Contract.
ITB 14.7	The Incoterms edition is: **2020**
ITB 14.8 (a)(iii), (b)(ii) and (c)(v)	Final Destination (Project Site): Regional Store MCPL Work Shop Jamshoro HESCO, Hyderabad/ Regional Store Nawabshah -Pakistan
ITB 14.8 (b)(i)	CIP, Karachi port.
ITB 15.1	The Bidder ***is*** required to quote in the currency of the Purchaser's Country the portion of the Bid price that corresponds to expenditures incurred in that currency.
ITB 16.4	Period of time the Goods are expected to be functioning for the purpose of spare parts: 05 Years

ITB 17.2 (a)	Manufacturer's authorization is: Required
ITB 17.2 (b)	After sales service is: Required To demonstrate compliance with this requirement, the Bidder shall submit, as part of its bid, a **statement confirming the availability of after-sales service**, including details of service arrangements, response time, and availability of spare parts. Where applicable, details of the Bidder's or its authorized agent's or a third-Party service facility shall also be provided.
ITB 18.1	The Bid shall remain valid until **15th January, 2027**, which is **120 days from the date of bid opening.**
ITB 18.3 (a)	NOT APPLICABLE
ITB 19.1	A Bid Security "shall be" required, A bid securing Declaration: **Shall not be required**. The bid security shall be furnished in favor of Chief Engineer (Development),the amount and currency of the Bid Security shall be; **US$ 155,000/- (One Hundred and Fifty-Five thousand US Dollar) or PKR 44,000,000/- (Forty-four million Pak Rupee only)**
ITB 19.3 (a)	The text in ITB 19.3(a) is replaced as follows. "An unconditional guarantee issued by a bank whereas guarantee from non-banking financial institution such as insurance, bonding or surety company is not applicable."
ITB 19.3 (d)	Other types of acceptable securities: Nil
ITB 20.3	The written confirmation of authorization to sign on behalf of the Bidder shall consist of**: Power Of Attorney.** Bid submitted by an existing or intended JV shall include an undertaking signed by all parties stating that: "**All parties shall be jointly and severally liable and nominating an authorized representative who shall have the authority to conduct all business for and on behalf of any and all the parties of JV during the bidding process and in the event the JV is awarded the contract during contract execution**"
	D. Submission of Bids
ITB 21.2	In addition to the original of the Bid, the number of copies is**: 02Nos** **In addition to above 01 Softcopy (USB) of Technical Proposal is required.** **It may be noted that submission of USB is merely to facilitate the evaluation process and will not be considered as a replacement of bid submission.**

	"In case of any conflict the hard copies of bids shall prevail"
ITB 22.1	For **Bid submission purposes** only, the Purchaser's address is: Attention: Chief Engineer (Development)PMU HESCO Address: Bungalow # A-1 HESCO Power wing Colony Hussainabad, Hyderabad City: *Hyderabad* Country: Pakistan Telephone: +92-22-9260070 Facsimile number: +92-22-9260525 Electronic mail address: cedevhesco@gmail.com, cepmu@hesco.gov.pk **The deadline for Bid submission is:** Date:- **17th September, 2026** Time: 11:00AM Bidders ***"shall not"*** have the option of submitting their Bids electronically.
	E. Public Opening of Technical Parts of Bids
ITB 25.1	The Bid opening shall take place at: Attention: Chief Engineer (Development)PMU HESCO Address: Bungalow #A-1 HESCO, Power wing Colony Hussainabad, Hyderabad City: Hyderabad Country: Pakistan Date:- **17th September, 2026** Time: Immediately after bid submission deadline
ITB 25.6	The Letter of Bid - Technical Part and the sealed envelope marked "Second Envelope - Financial Part" shall be initialed by the committee members of the Purchaser conducting Bid opening and shall be numbered.
G. Evaluation of Technical Parts of Bids	
ITB 32.4	**The technical factors and sub factors as applicable and the corresponding scores out of 100% are:**

Rated Criteria

Sr. No.	Technical Factor	Technical Factor Weightage	Sub Factor		Sub Factor Weightage
1	Performance & Reliability	40%	Magnetic Contactor-Mechanical: minimum 1,000,000 Operations		20%
			Battery	Capacity 2000mAH	10%
				Battery Life Min 5 Years	10%
2	System Integration & Interoperability	30%	Integration with EAM,CMMS, ERP, and historian systems		10%
			Support for third-party analytics tools		10%
			Number of abnormal events recorded Min 20		10%
3	Sustainability & Environmental Impact	30%	Energy Efficiency of APMS hardware (e.g., low standby power)		10%
			Use of recyclable materials and RoHS compliance		10%
			Environmental Management Certification (ISO 14001)		10%

H. Notification of Evaluation of Technical Parts and Public Opening of Financial Parts of Bids

ITB 33.5	The Letter of Bid – Financial Part and the Price Schedules shall be initialed by all representatives of the Purchaser conducting Bid opening.

I. Evaluation of Financial Part of Bids

ITB 34.2(a)	Bidder must quote for complete lot and evaluation will be carried out lot wise for award.
ITB 34.6	The adjustments shall be determined using the following criteria, from amongst those set out in Section III, Evaluation and Qualification Criteria: ***[refer to Section III, Evaluation and Qualification Criteria; insert complementary details if necessary]*** **(a)** Deviation in Delivery schedule: ***No*** **(b)** Deviation in payment schedule: ***No*** **(c)** the cost of major replacement component, mandatory spare parts, and service: ***No*** **(d)** the availability in the Purchaser's Country of spare parts and after-sales services for the equipment offered in the Bid: ***No*** **(e)** Life cycle costs: the costs during the life of the goods or equipment: ***No*** **(f)** the performance and productivity of the equipment offered; **No**
ITB 36.1	The currency that shall be used for Bid evaluation and comparison purposes to convert at the selling exchange rate all Bid prices expressed in various currencies into a single currency is: **Pakistani Rupee (PKR)** The source of exchange rate shall be: Selling Exchange Rate issued by **State Bank of Pakistan***:* The date for the exchange rate shall be 28 days prior to the deadline for submission of bids**.**
ITB 37.1	A margin of domestic preference ***"shall not "*** apply.
J. Evaluation of Combined Technical and Financial Parts and Most Advantageous Bid	
ITB 40.1	The weightage to be given for cost is 70%, Technical factor is 30%.
	J. Award of Contract
ITB 45.1	The maximum percentage by which quantities may be increased is: ***15%*** The maximum percentage by which quantities may be decreased is: ***15%***
ITB 50.1	The procedures for making a Procurement-related Complaint are detailed in the "Procurement Regulations for IPF Borrowers (Annex III)." If a Bidder wishes to make a Procurement-related Complaint, the Bidder should submit its complaint following these procedures, in writing (by the quickest means available, that is either by email or fax), to: **For the attention**: General Manager/Chief Engineer (Technical), HESCO **Purchaser**: HESCO **Email address***:* i. **gmtechnicalhesco@gmail.com** ii. **cto@hesco.gov.pk**

	A copy of the complaint can be sent for the Bank's information and monitoring to: pprocurementcomplaints@worldbank.org" In summary, a Procurement-related Complaint may challenge any of the following: **1.** the terms of the Bidding Documents; **2.** the Purchaser's decision to exclude a Bidder from the procurement process prior to the award of contract; and **3**. the Purchaser's decision to award the contract.

Section III - Evaluation and Qualification Criteria

This section contains the criteria that the purchaser shall use to evaluate bids and qualify the bidders. No other factors, methods or criteria shall be used other than specified in this bidding document

TECHNICAL PART

1. Qualification

Qualification Criteria (ITB 32.1)

The Purchaser shall assess each Bid against the following Qualification Criteria. Requirements not included in the text below shall not be used in the evaluation of the Bidder's qualifications.

(a) **Financial Capability**: The Bidder shall submit audited financial statements or, if not required by the law of the Bidder's country, other financial statements acceptable to the Purchaser, for the last Three (03) years prior to bid submission deadline, demonstrating the current soundness of the Bidder's financial position. For a joint venture, this requirement shall be met by each member;

(b) **Specific Experience**:

The Bidder demonstrate that it has successfully completed contracts as per following requirements:

(i) Value: Executed up-to five (5) contracts within the last ten (10) years with an aggregate value of at least USD 23.25 Million at least one (1) contract of value not less than USD 7.75 Million and are similar in nature and complexity to the Goods and Related Services under the Contract. For a joint venture, this requirement may be met by all members combined.

(ii) Quantity: "Executed at least two (2) contracts within the last ten (10) years with at least 70% of quantities stated in the bidding document and are similar in nature and complexity to the Goods and Related Services under the Contract. For a joint venture, this requirement may be met by all members combined.

For the purpose of evaluation, the contract amount shall be considered. In case the contract currency is other than USD, then bidder shall provide the certified equivalent value of the contract in USD, calculated using the exchange rate prevailing on the date of contract award.

(c) **Documentary Evidence:**

The Bidder shall furnish documentary evidence to demonstrate that the Goods it offers meet the following usage requirement:

i. It shall accept disconnect & re-connect commands as programmed, on demand data request and other parameters/updates from head end system/MDM system.
ii. it shall have internal disconnection due to preset load limiting (overload)or exceeding thermal threshold and must communicate the instantaneous and critical data with the latest status of the breaker contacts to the head end system etc.

(d) **Manufacturing experience and Technical Capacity**:

For the items under the Contract that the bidder is a manufacturer, the Bidder shall furnish documentary evidence to demonstrate that:

i. it has manufactured goods of similar nature and complexity for at least 5 years, prior to the bid submission deadline; and
ii. its annual production capacity of goods of similar nature and complexity for each of the last 5 years prior to the bid submission deadline, is at least 3 times the quantities specified under the contract.

[If cyber security risk has been assessed to present potential or actual cyber security risks, include key relevant specific experience requirement to demonstrate cyber security experience, practice and track record, including relevant Cyber security accreditation such as ISO 27000 (ISO 27001) or equivalent.]

(e) **Manufacturer's authorization: A Bidder who does not manufacture an item/s where a manufacturer authorization is required in accordance with BDS ITB 17.2 (a), the Bidder shall provide evidence of being duly authorized by a manufacturer (Manufacturer's Authorization Form, Section IV, Bidding Forms), meeting the criteria in (d) (i) and (ii) above, to supply the Goods;**

At the time of Contract Award, the Bidder (including each subcontractor proposed by the Bidder) shall not be subject to disqualification by the Bank for non-compliance with SEA/ SH obligations.

(f) The Bidder shall submit the following additional documents in its Bid:
i. Catalogue
ii. Valid Proto-type reports of equipment's as per technical specification given in Section VII Schedule of Requirement. if not then provide affidavit that successful prototype report will be provided by the bidder at his own cost within 2 months from contract signing date without affecting the completion schedule.

iii. Bidder will provide affidavit regarding provision of UDIL Compliance certificate from PITC Lahore PITC within 07 days from the date of issuance of prototype approval complete in all respect. As per the prevailing practice PITC issues the UDIL certificate within 30 days from the date of submission of the request. Any delay from the issuance of certificate from the PITC will not be attributed on bidders/suppliers' part provided the bidder request for UDIL certification is complete in all respect.

iv. In addition to above , please confirm the compliance and submission of required information/documents as stated in ITB-17.2(b)

2. Technical Evaluation (ITB 32.4)

After confirmation of compliance of specification, assessment of adequacy of Technical Part with the requirements

i. Requirement stated in technical part are to be met prior to being considered for technical evaluation by applying the scored technical factors/subfactors in accordance with BDS ITB 32.4.

ii. Folowing are the rated criteria matrix for scoring.

Score (of the total score for the factor/subfactor as applicable	Description	Remarks
0	**For Sr No.01 = (i.)** Bidder will get zero marks if he confirms only the minimum values as per the specs but will get more marks if he confirms higher value. **For Sr No.02 & 3 = (ii.)** required features are absent or insufficient and no proper relevant information has been provided to demonstrate compliance with requirements.	
2	Sufficient information provided to demonstrate how the requirement will be met.	
4	Sufficient information provided that significantly exceeds the requirement and the bid demonstrate to significant value addition.	

Technical Part Scoring Methodology

Sr. No.	Technical Factor	Technical Factor Weightage	Sub Factor (i)			Score	Sub-Factor Weightage
1	Performance & Reliability	40%	Magnetic Contactor-Mechanical: minimum 1,000,000 Operations	=1,000,000		0	20%
				1,000,000-1,250,000		2	
				>1,250,000		4	
			Battery	Capacity 2000mAH	=2000mAH	0	10%
					=2000-2500mAH	2	
					>2500mAH	4	
				Battery Life Min 5 Years	=5years	0	10%
					=5-7 years	2	
					>7 years	4	
2	System Integration & Interoperability	30%	Integration with EAM,CMMS, ERP, and historian systems		Two Systems Available	0	10%
					Three Systems available	2	
					All four Systems available	4	
			Support for third-party analytics tools		< 50%	0	10%
					≥ 50% – 70%	2	
					> 70% – 90%	4	
			Number of abnormal events recorded Min 20		20	0	10%
					20-30	2	
					>30	4	
3	Sustainability & Environmental Impact	30%	Energy Efficiency of APMS hardware (e.g., low standby power)		>15 Watts	0	10%
					10 – 15 Watts	2	
					<10 Watts	4	
			Use of recyclable materials and RoHS compliance		Non-Compliance	0	10%
					Partially Compliance	2	
					Fully Compliance	4	
			Environmental Management Certification (ISO 14001)		Not Available	0	10%
					In Process	2	
					Available	4	

The score for each sub- factor (i) within a factor (j) will be combined with the scores of sub- factors in *the* same factor as a weighted sum to form the Factor Technical Score using the following formula:

$$S_j \equiv \sum_{i=1}^{k} t_{ji} * w_{ji}$$

where:

t_{ji} = the technical score for sub- factor "i" in factor "j",

w_{ji} = the weight of sub- factor "i" in factor "j",

k = the number of scored sub-factors in factor "j", and

$$\sum_{i=1}^{k} w_{ji} = 1$$

The Factor Technical Scores will be combined in a weighted sum to form the total Technical Bid Score using the following formula:

$$T \equiv \sum_{j=1}^{n} S_j * W_j$$

where:

S_j = the Factor Technical Score of factor "j",

W_j = the weight of factor "j" as specified **in the BDS,**

n = the number of Factors, and

$$\sum_{j=1}^{n} W_j = 1$$

FINANCIAL PART

1. Margin of Preference (ITB 37)

A margin of 15% would be applicable to the CIP (Carriage and Insurance Paid) price of goods manufactured abroad when evaluating bids.

3. Evaluation Criteria (ITB 34.6)

The Purchaser shall use the criteria and methodologies listed in this Section to evaluate the Financial Part.

The Purchaser's evaluation of the Financial Part may take into account, in addition to the Bid Price, one or more of the following factors as **specified in BDS ITB 34.6,** using the following criteria and methodologies.

(a) Delivery schedule. (As per Incoterms specified in the BDS):
No

(b) Deviation in payment schedule:
No

(c) Cost of major replacement components, mandatory spare parts, and service:

No

(d) Availability in the Purchaser's Country of spare parts and after sales services for equipment offered in the Bid*:*

No

(e) Life Cycle Costs

No

f) Performance and productivity of the equipment:

No

(g) Specific additional criteria

No

Combined Evaluation

The Purchaser will evaluate and compare the Bids that have been determined to be substantially responsive.

The Purchaser's evaluation of responsive Bids will take into account technical factors, in addition to cost factors.

An Evaluated Bid Score (B) will be calculated for each responsive Bid using the following formula (for comparison in percentages), which permits a comprehensive assessment of the Bid price and the technical merits of each Bid:

$$B \equiv \frac{Clow}{C} * X * 100 + \frac{T}{Thigh} * (1 - X) * 100$$

Where

C = Evaluated Bid Price

C_{low} = the lowest of all Evaluated Bid Prices among responsive Bids

T = the total Technical Score awarded to the Bid

T_{high} = the Technical Score achieved by the Bid that was scored best among all responsive Bids

X = weight for the Cost as specified in the BDS

The Bid with the best evaluated Bid Score (B) among responsive Bids shall be the Most Advantageous Bid provided the Bidder is qualified to perform the Contract.

Multiple Contracts (ITB 34.4)

Not Applicable

Alternative Bids (ITB 13.1)

Not Applicable

Section IV - Bidding Forms

Table of Forms

Letter of Bid – Technical Part 60

Technical Part 62

Technical Bid Checklist 63

Functional Guarantees 64

Manufacturer's Authorization 65

Bidder Information Form 66

Bidder's JV Members Information Form 67

Sexual Exploitation and Abuse (SEA) and/or Sexual Harassment Performance Declaration 68

Form of Bid Security 69

Form of Bid-Securing Declaration 71

Letter of Bid - Financial Part 72

Price Schedule Forms 74

Price Schedule: Goods Manufactured Outside the Purchaser's Country, to be Imported 75

Price Schedule: Goods Manufactured Outside the Purchaser's Country, already imported* 76

Price Schedule: Goods Manufactured in the Purchaser's Country 77

Letter of Bid – Technical Part

Date of this Bid submission: [*insert date (as day, month and year) of Bid submission*]
RFB No.: [*insert number of Bidding process*]

Request for Bid:

To: Hyderabad Electric Supply Company (HESCO)

We, the undersigned Bidder, hereby submit our Bid, in two parts, namely:

(a) Technical Part, and

(b) Financial Part.

In submitting our Bid we make the following declarations:

(a) **No reservations:** We have examined and have no reservations to the bidding document, including addenda issued in accordance with Instructions to Bidders (ITB 8);

(b) **Eligibility**: We meet the eligibility requirements and have no conflict of interest in accordance with ITB 4;

(c) **Bid/Proposal-Securing Declaration**: We have not been suspended nor declared ineligible by the Purchaser based on execution of a Bid Securing Declaration or Proposal Securing Declaration in the Purchaser's country in accordance with ITB 4.7;

(d) **Sexual Exploitation and Abuse (SEA) and/or Sexual Harassment (SH):** [*select the appropriate option from (i) to (iii) below and delete the others. In case of JV members and/or subcontractors, indicate the status of disqualification by the Bank of each JV member and/or subcontractor]*.

We, including any of our subcontractors:

(i) [have not been subject to disqualification by the Bank for non-compliance with SEA/ SH obligations.]

(ii) [are subject to disqualification by the Bank for non-compliance with SEA/ SH obligations.]

(iii) [had been subject to disqualification by the Bank for non-compliance with SEA/ SH obligations, and were removed from the disqualification list. An arbitral award on the disqualification case has been made in our favor.]

(e) **Conformity:** We offer to supply in conformity with the bidding document and in accordance with the Delivery Schedules specified in the Schedule of Requirements the following Goods: [*insert a brief description of the Goods and Related Services*];

(f) **Bid Validity**: Our Bid shall be valid until *[insert day, month and year in accordance with ITB 18.1],* and it shall remain binding upon us and may be accepted at any time before the expiration of that period;

(g) **Performance Security**: If our Bid is accepted, we commit to obtain a performance security in accordance with the bidding document;

(h) **One Bid per Bidder**: We are not submitting any other Bid(s) as an individual Bidder, and we are not participating in any other bid(s) as a Joint Venture member or as a subcontractor, and meet the requirements of ITB 4.3, other than Alternative Bids submitted in accordance with ITB 13;

(i) **Suspension and Debarment**: We, along with any of our subcontractors, suppliers, consultants, manufacturers, or service providers for any part of the contract, are not subject to, and not controlled by any entity or individual that is subject to, a temporary suspension or a debarment imposed by the World Bank Group or a debarment imposed by the World Bank Group in accordance with the Agreement for Mutual Enforcement of Debarment Decisions between the World Bank and other development banks. Further, we are not ineligible under the Purchaser's country laws or official regulations or pursuant to a decision of the United Nations Security Council;

(j) **State-owned enterprise or institution**: [*select the appropriate option and delete the other*] [*We are not a state-owned enterprise or institution*] / [*We are a state-owned enterprise or institution but meet the requirements of ITB 4.6*];

(k) **Binding Contract**: We understand that this Bid, together with your written acceptance thereof included in your Letter of Acceptance, shall constitute a binding contract between us, until a formal contract is prepared and executed;

(l) **Not Bound to Accept**: We understand that you are not bound to accept the lowest evaluated cost Bid, the Most Advantageous Bid or any other Bid that you may receive; and

(m) **Fraud and Corruption**: We hereby certify that we have taken steps to ensure that no person acting for us, or on our behalf, engages in any type of Fraud and Corruption.

Name of the Bidder: *[*insert complete name of Bidder*]

Name of the person duly authorized to sign the Bid on behalf of the Bidder: ** [*insert complete name of person duly authorized to sign the Bid*]

Title of the person signing the Bid: [*insert complete title of the person signing the Bid*]

Signature of the person named above: [*insert signature of person whose name and capacity are shown above*]

Date signed [*insert date of signing*] **day of** [*insert month*], [*insert year*]

*: In the case of the Bid submitted by a Joint Venture specify the name of the Joint Venture as Bidder.
**: Person signing the Bid shall have the power of attorney given by the Bidder. The power of attorney shall be attached with the Bid Schedules.

Technical Part

The technical bid shall include all relevant information required to evaluate the technical Part in accordance with the requirements.

To establish the conformity of the Goods and Related Services to the RFB document, the Bidder shall furnish the documentary evidence that the Goods conform to the technical specifications and standards, including any essential technical and performance characteristics specified in Section VII, Schedule of Requirements. Any required functional guarantees shall also be provided. The attached forms/format may support the Bidder to organize information required to present its technical bid.

The documentary evidence may be in the form of literature, drawings or data, and shall consist of a detailed item by item description of the essential technical and performance characteristics of the Goods and Related Services, demonstrating substantial responsiveness of the Goods and Related Services to the technical specification, and if applicable, a statement of deviations and exceptions to the provisions of the Section VII, Schedule of Requirements.

In the interest of timely bid evaluation and contract award, Bidders are encouraged not to overload the supporting materials with documents that do not directly address the Purchaser's requirements.

The Bidder shall also furnish a list giving full particulars, including available sources and current prices of spare parts, special tools, etc., necessary for the proper and continuing functioning of the Goods during the period specified in the BDS following commencement of the use of the goods by the Purchaser.

Standards for workmanship, process, material, and equipment, as well as references to brand names or catalogue numbers specified by the Purchaser in the Schedule of Requirements, are intended to be descriptive only and not restrictive. The Bidder may offer other standards of quality, brand names, and/or catalogue numbers, provided that it demonstrates, to the Purchaser's satisfaction, that the substitutions ensure substantial equivalence or are superior to those specified in the Section VII, Schedule of Requirements.

If the contract has been assessed to present potential or actual cyber security risks, the technical bid must include proposed cyber security risks management plan.

If there are assessed supply chain risks, the technical bid must include proposed supply chain risk management plan.

The Manufacture's Authorizations shall be included in accordance with ITB BDS 17.2 (a) and the attached Manufacturer's Authorization form.

Technical Bid Checklist-1

Sr. No.	Technical Requirement	Bidder's Technical Requirement's Compliance	Bidder's References to Supporting Information
1	Magnetic Contactor-Mechanical: minimum 1,000,000 Operations.		
2	Battery.		
3	Integration with EAM,CMMS, ERP, and historian systems.		
4	Support for third-party analytics tools.		
5	Number of abnormal events recorded Min 20.		
6	Energy Efficiency of APMS hardware (e.g., low standby power).		
7	Use of recyclable materials and RoHS compliance.		
8	Environmental Management Certification (ISO 14001).		

Functional Guarantees

(Not Required)

The Bidder shall copy in the left column of the table below; the identification of each functional guarantee required in the Specification and in the right column, provides the corresponding value for each functional guarantee of the proposed Goods.

Required Functional Guarantee	Value of Functional Guarantee of the Goods

Bidder shall quote value of Functional guarantee for quoted items beyond the minimum requirement specified in rated criteria. Bidder will also ensure the reasonability of quoted value.

.

Manufacturer's Authorization

Date: *[insert date (as day, month and year) of Bid submission]*

RFB No.: *[insert number of RFB process]*
Alternative No.: *[insert identification No if this is a Bid for an alternative]*

To: *[insert complete name of Purchaser]*

WHEREAS

We *[insert complete name of Manufacturer],* who are official manufacturers of *[insert type of goods manufactured],* having factories at [insert full address of Manufacturer's factories], do hereby authorize *[insert complete name of Bidder]* to submit a Bid the purpose of which is to provide the following Goods, manufactured by us *[insert name and or brief description of the Goods],* and to subsequently negotiate and sign the Contract.

We hereby extend our full guarantee and warranty in accordance with Clause 28 of the General Conditions of Contract, with respect to the Goods offered by the above firm.

We confirm that we do not engage or employ forced labor or persons subject to trafficking or child labor, in accordance with Clause 14 of the General Conditions of Contract.

Signed: *[insert signature(s) of authorized representative(s) of the Manufacturer]*

Name: *[insert complete name(s) of authorized representative(s) of the Manufacturer]*

Title: *[insert title]*

Dated on _____ day of _____, _____ *[insert date of signing]*

Bidder Information Form

[The Bidder shall fill in this Form in accordance with the instructions indicated below. No alterations to its format shall be permitted and no substitutions shall be accepted.]

Date: *[insert date (as day, month and year) of Bid submission*]
RFB No.: *[insert number of Bidding process]*
Alternative No.: *[insert identification No if this is a Bid for an alternative]*

Page _____ of_ _____ pages

1. Bidder's Name *[insert Bidder's legal name]*
2. In case of JV, legal name of each member : *[insert legal name of each member in JV]*
3. Bidder's actual or intended country of registration: *[insert actual or intended country of registration]*
4. Bidder's year of registration: *[insert Bidder's year of registration]*
5. Bidder's Address in country of registration: *[insert Bidder's legal address in country of registration]*
6. Bidder's Authorized Representative Information Name: *[insert Authorized Representative's name]* Address: *[insert Authorized Representative's Address]* Telephone/Fax numbers: *[insert Authorized Representative's telephone/fax numbers]* Email Address: *[insert Authorized Representative's email address]*
7. Attached are copies of original documents of *[check the box(es) of the attached original documents]* ☐ Articles of Incorporation (or equivalent documents of constitution or association), and/or documents of registration of the legal entity named above, in accordance with ITB 4.4. ☐ In case of JV, letter of intent to form JV or JV agreement, in accordance with ITB 4.1. ☐ In case of state-owned enterprise or institution, in accordance with ITB 4.6 documents establishing: • Legal and financial autonomy • Operation under commercial law • Establishing that the Bidder is not under the supervision of the Purchaser 8. Included are the organizational chart, a list of Board of Directors, and the beneficial ownership. The successful Bidder shall provide additional information on beneficial ownership, using the Beneficial Ownership Disclosure Form.

Bidder's JV Members Information Form

[The Bidder shall fill in this Form in accordance with the instructions indicated below. The following table shall be filled in for the Bidder and for each member of a Joint Venture]].

Date: *[insert date (as day, month and year) of Bid submission*]
RFB No.: *[insert number of RFB process]*
Alternative No.: *[insert identification No if this is a Bid for an alternative]*

Page _____ of_ _____ pages

1. Bidder's Name: *[insert Bidder's legal name]*
2. Bidder's JV Member's name: *[insert JV's Member legal name]*
3. Bidder's JV Member's country of registration: *[insert JV's Member country of registration]*
4. Bidder's JV Member's year of registration: *[insert JV's Member year of registration]*
5. Bidder's JV Member's legal address in country of registration: *[insert JV's Member legal address in country of registration]*
6. Bidder's JV Member's authorized representative information Name: *[insert name of JV's Member authorized representative]* Address: *[insert address of JV's Member authorized representative]* Telephone/Fax numbers: *[insert telephone/fax numbers of JV's Member authorized representative]* Email Address: *[insert email address of JV's Member authorized representative]*
7. Attached are copies of original documents of *[check the box(es) of the attached original documents]* ☐ Articles of Incorporation (or equivalent documents of constitution or association), and/or registration documents of the legal entity named above, in accordance with ITB 4.4. ☐ In case of a state-owned enterprise or institution, documents establishing legal and financial autonomy, operation in accordance with commercial law, and that they are not under the supervision of the Purchaser, in accordance with ITB 4.6. 8. Included are the organizational chart, a list of Board of Directors, and the beneficial ownership. The successful Bidder shall provide additional information on beneficial ownership for each JV member using the Beneficial Ownership Disclosure Form.

Sexual Exploitation and Abuse (SEA) and/or Sexual Harassment Performance Declaration

[The following table shall be filled in by the Bidder, each member of a Joint Venture and each subcontractor proposed by the Bidder]

Bidder's Name: *[insert full name]*
Date: *[insert day, month, year]*
Joint Venture Member's or Subcontractor's Name: *[insert full name]*
RFB No. and title: *[insert RFB number and title]*
Page *[insert page number]* of *[insert total number]* pages

SEA and/or SH Declaration **in accordance with Section III, Qualification Criteria, and Requirements**
We: ☐ (a) have not been subject to disqualification by the Bank for non-compliance with SEA/ SH obligations ☐ (b) are subject to disqualification by the Bank for non-compliance with SEA/ SH obligations ☐ (c) had been subject to disqualification by the Bank for non-compliance with SEA/ SH obligations, and were removed from the disqualification list. An arbitral award on the disqualification case has been made in our favor.
[*If (c) above is applicable, attach evidence of an arbitral award reversing the findings on the issues underlying the disqualification.]*

Form of Bid Security

(Bank Guarantee)

[The bank shall fill in this Bank Guarantee Form in accordance with the instructions indicated.]

[Guarantor letterhead or SWIFT identifier code]

Beneficiary: *[Purchaser to insert its name and address]*

RFB No.: *[Purchaser to insert reference number for the Request for Bids]*

Alternative No*.: [Insert identification No if this is a Bid for an alternative]*

Date: *[Insert date of issue]*

BID GUARANTEE No.: *[Insert guarantee reference number]*

Guarantor: *[Insert name and address of place of issue, unless indicated in the letterhead]*

We have been informed that _____ *[insert name of the Bidder, which in the case of a joint venture shall be the name of the joint venture (whether legally constituted or prospective) or the names of all members thereof]* (hereinafter called "the Applicant") has submitted or will submit to the Beneficiary its Bid (hereinafter called "the Bid") for the execution of _____ under Request for Bids No. _____ _ ("the RFB").

Furthermore, we understand that, according to the Beneficiary's conditions, Bids must be supported by a Bid guarantee.

At the request of the Applicant, we, as Guarantor, hereby irrevocably undertake to pay the Beneficiary any sum or sums not exceeding in total an amount of _____ (_____) upon receipt by us of the Beneficiary's complying demand, supported by the Beneficiary's statement, whether in the demand itself or a separate signed document accompanying or identifying the demand, stating that either the Applicant:

(a) has withdrawn its Bid prior to the Bid validity expiry date set forth in the Applicant's Letter of Bid, or any extended date provided by the Applicant; or

(b) having been notified of the acceptance of its Bid by the Beneficiary prior to the expiry date of the Bid validity or any extension thereof provided by the Applicant has failed to: (i) sign the contract agreement, or (ii) furnish the performance security, in accordance with the Instructions to Bidders ("ITB") of the Beneficiary's bidding document.

This guarantee will expire: (a) if the Applicant is the successful Bidder, upon our receipt of copies of the Contract agreement signed by the Applicant and the performance security issued to the Beneficiary in relation to such Contract agreement; or (b) if the Applicant is

not the successful Bidder, upon the earlier of (i) our receipt of a copy of the Beneficiary's notification to the Applicant of the results of the Bidding process; or (ii) twenty-eight days after the expiry date of the Bid validity.

Consequently, any demand for payment under this guarantee must be received by us at the office indicated above on or before that date.

This guarantee is subject to the Uniform Rules for Demand Guarantees (URDG) 2010 Revision, ICC Publication No. 758.

_____

[Signature(s)]

Note: All italicized text is for use in preparing this form and shall be deleted from the final product.

Form of Bid-Securing Declaration

Not Applicable

Letter of Bid - Financial Part

INSTRUCTIONS TO BIDDERS: DELETE THIS BOX ONCE YOU HAVE COMPLETED THE DOCUMENT

Place this Letter of Bid - Financial Part in the second envelope marked "FINANCIAL PART".

The Bidder must prepare the Letter of Bid - Financial Part on stationery with its letterhead clearly showing the Bidder's complete name and business address.

Note: All italicized text is to help Bidders in preparing this form.

Date of this Bid submission: [*insert date (as day, month and year) of Bid submission*]
RFB No.: [*insert number of bidding process*]
Request for Bid No.: [*insert identification*]
Alternative No.: [*insert identification No if this is a Bid for an alternative*]

To: [*insert complete name of Purchaser*]

We, the undersigned Bidder, hereby submit the second part of our Bid, the Financial Part

In submitting our Financial Part we make the following additional declarations:

(a) **Bid Validity**: Our Bid shall be valid until *[insert day, month and year in accordance with ITB 18.1],* and it shall remain binding upon us and may be accepted at any time before the expiration of that period;

(b) **Total Price:** The total price of our Bid, excluding any discounts offered in item (c) below is:

In case of only one lot, the total price of the Bid is [*insert the total price of the bid in words and figures, indicating the various amounts and the respective currencies*];

In case of multiple lots, the total price of each lot is [*insert the total price of each lot in words and figures, indicating the various amounts and the respective currencies*];

In case of multiple lots, total price of all lots (sum of all lots) [*insert the total price of all lots in words and figures, indicating the various amounts and the respective currencies*];

(c) **Discounts:** The discounts offered and the methodology for their application are:

(i) The discounts offered are: [*Specify in detail each discount offered*]

(ii) The exact method of calculations to determine the net price after application of discounts is shown below: [*Specify in detail the method that shall be used to apply the discounts*];

(d) **Commissions, gratuities and fees:** We have paid, or will pay the following commissions, gratuities, or fees with respect to the bidding process or execution of the Contract: [*insert complete name of each Recipient, its full address, the reason for which each commission or gratuity was paid and the amount and currency of each such commission or gratuity*].

Name of Recipient	Address	Reason	Amount

(If none has been paid or is to be paid, indicate "none.")

(e) **Binding Contract:** We understand that this Bid, together with your written acceptance thereof included in your Letter of Acceptance, shall constitute a binding contract between us, until a formal contract is prepared and executed.

Name of the Bidder:*[*insert complete name of the Bidder*]

Name of the person duly authorized to sign the Bid on behalf of the Bidder: **
[*insert complete name of person duly authorized to sign the Bid*]

Title of the person signing the Bid: [*insert complete title of the person signing the Bid*]

Signature of the person named above: [*insert signature of person whose name and capacity are shown above*]

Date signed [*insert date of signing*] **day of** [*insert month*], [*insert year*]

*: In the case of the Bid submitted by a Joint Venture specify the name of the Joint Venture as Bidder.

**: Person signing the Bid shall have the power of attorney given by the Bidder. The power of attorney shall be attached with the Bid Schedules.

Price Schedule Forms

*[The Bidder shall fill in these Price Schedule Forms in accordance with the instructions indicated. The list of line items in column 1 of the **Price Schedules** shall coincide with the List of Goods and Related Services specified by the Purchaser in the Schedule of Requirements.]*

Price Schedule: Goods Manufactured Outside the Purchaser's Country, to be Imported

(Group C Bids, goods to be imported) Date: _____
Currencies in accordance with ITB 15 RFB No: _____

1	2	3	4	5	6	7	8	9
Item No.	Description of Goods	Country of Origin	Delivery Date as defined by Incoterms	Quantity and physical unit	Unit price CIP in accordance with ITB 14.8(b)(i)	CIP Price per line item (Col. 5x6)	Price per line item for inland transportation and other services required in the Purchaser's Country to convey the Goods to their final destination specified in BDS i.e Regional Store MCPL Workshop Jamshoro HESCO, Hyderabad/Nawabshah Pakistan	Total Price per Line item (Col. 7+8)
1		[insert country of origin of the Good]	240 days from date of contract signing					
2								
3								
4								
5								
6								
							Total Price(A)	

Name of Bidder *[insert complete name of Bidder]* Signature of Bidder *[signature of person signing the Bid]* Date *[Insert Date]*

Price Schedule: Goods Manufactured Outside the Purchaser's Country, already imported*

(Group C Bids, Goods already imported)
Currencies in accordance with ITB 15

Date: _____
RFB No: _____

1	2	3	4	5	6	7	8	9	10	11	12
Item No	Description of Goods	Country of Origin	Delivery Date as defined by Incoterms	Quantity and physical unit	Unit price including Custom Duties and Import Taxes paid, in accordance with ITB 14.8(c)(i)	Custom Duties and Import Taxes paid per unit in accordance with ITB 14.8(c)(ii) , [to be supported by documents]	Unit Price net of custom duties and import taxes, in accordance with ITB 14.8 (c) (iii) (Col. 6 minus Col.7)	Price per line item net of Custom Duties and Import Taxes paid, in accordance with ITB 14.8(c)(i) (Col. 5×8)	Price per line item for inland transportation and other services required in the Purchaser's Country to convey the goods to their final destination, as specified in BDS in accordance with ITB 14.8 (c)(v)	Sales and other taxes paid or payable per item if Contract is awarded (in accordance with ITB 14.8(c)(iv)	Total Price per line item (Col. 9+10)
I			240 days from date of contract signing		*[insert unit price per unit]*	*[insert custom duties and taxes paid per unit]*	*[insert unit price net of custom duties and import taxes]*	*[insert price per line item net of custom duties and import taxes]*	*[insert price per line item for inland transportation and other services required in the Purchaser's Country]*	*[insert sales and other taxes payable per item if Contract is awarded]*	*[insert total price per line item]*
2											
3											
4											
5											
6											
										Total Bid Price(A)	

Name of Bidder *[insert complete name of Bidder]* Signature of Bidder *[signature of person signing the Bid]* Date *[insert date]*

* *[For previously imported Goods, the quoted price shall be distinguishable from the original import value of these Goods declared to customs and shall include any rebate or mark-up of the local agent or representative and all local costs except import duties and taxes, which have been and/or have to be paid by the Purchaser. For clarity the Bidders are asked to quote the price including import duties, and additionally to provide the import duties and the price net of import duties which is the difference of those values.]*

Price Schedule: Goods Manufactured in the Purchaser's Country

Purchaser's Country

_____

(Group A and B Bids)

Currencies in accordance with ITB 15

Date: _____
RFB No: _____
Alternative No: _____

1	2	3	4	5	6	7	8	9	10
Item No.	Description of Goods	Delivery Date as defined by Incoterms	Quantity and physical unit	Unit price EXW	Total EXW price per line item (Col. 4×5)	Price per line item for inland transportation and other services required in the Purchaser's Country to convey the Goods to their **final destination i,e** Regional Store MCPL Workshop Jamshoro HESCO, Hyderabad/Nawabshah Pakistan	Cost of local labor, raw materials and components from with origin in the Purchaser's Country % of Col. 5	Sales and other taxes payable per line item if Contract is awarded (in accordance with ITB 14.8(a)(ii)	Total Price per line item (Col. 6+7)
1		240 days from date of contract signing		*[insert EXW unit price]*	*[insert total EXW price per line item]*	*[insert the corresponding price per line item]*	*[Insert cost of local labor, raw material and components from within the Purchase's country as a % of the EXW price per line item]*	*[insert sales and other taxes payable per line item if Contract is awarded]*	*[insert total price per item]*
2									
3									
4									
5									
6									
								Total Price (A)	

Name of Bidder *[insert complete name of Bidder]* Signature of Bidder *[signature of person signing the Bid]* Date *[insert date]*

Price and Completion Schedule - Related Services (B-1)

Currencies in accordance with ITB 15				Date:_____ RFB No: _____ Alternative No:_____		
Service N°	Description of Services	Country of Origin	Delivery Date at place of Final destination	Quantity and physical unit	Unit price excluding SST	Total Price per Service (Col. 5*6)
1	2	3	4	5	6	7
A	Collection from HESCO stores, transportation, safe handling, and installation of APMS, including the arrangement of all complete accessories (i.e., lugs, PG connectors, **earthing as per specification**, etc.) on **200 kVA Distribution Transformers**, to complete the job in all respects as per site requirements, including preparation of A-90 (Assets Capitalization).					
1	**Division : Garikhata (Hyderabad Circle)**	**Pakistan**	365 days after the signing of contract	504		
2	**Division: Latifabad -I(Hyderabad Circle)**			293		
3	**Division: Latifabad –II (Hyderabad Circle)**			479		
4	**Division: Qasimabad (Hyderabad Circle)**			982		
5	**Division: Tando Allahyar (Hyderabad Circle)**			183		
6	**Division: Phulelli (Laar Circle)**			25		
7	**Division : Kotri (Laar Circle)**			100		
8	**Division: T.M. Khan (Laar Circle)**			50		
9	**Division : Thatta (Laar Circle)**			75		
10	**Division: Badin (Laar Circle)**			50		
11	**Division: Nawabshah (Nawabshah Circle)**			220		
12	**Division: Sanghar (Nawabshah Circle)**			110		
13	**Division: Tando Adam (Nawabshah Circle)**			90		
14	**Division: Matiari (Nawabshah Circle)**			80		
15	**Division: Mirpur Khas (Mirpur Khas Circle)**			100		
16	**Division: Digri (Mirpur Khas Circle)**			74		
17	**Division: Umer Kot (Mirpur Khas Circle)**			85		
				Total Price B1		

Name of Bidder *[insert complete name of Bidder]* Signature of Bidder *[signature of person signing the Bid]* Date *[insert date]*

Note:- This is tentative list; the final list will be shared at the time of the actual commencement of work.

Price and Completion Schedule - Related Services (B-2)

Currencies in accordance with ITB 15

Date:_____
RFB No: _____
Alternative No:_____

Service N°	Description of Services	Country of Origin	Delivery Date at place of Final destination	Quantity and physical unit	Unit price excluding SST	Total Price per Service (Col. 5*6)
1	2	3	4	5	6	7
A	Collection from HESCO stores, transportation, safe handling, and installation of APMS, including the arrangement of all complete accessories (i.e., lugs, PG connectors, **earthing as per specification**, etc.) on **100 kVA Distribution Transformers**, to complete the job in all respects as per site requirements, including preparation of A-90 (Assets Capitalization).					
1	**Division : Garikhata (Hyderabad Circle)**	**Pakistan**	365 days after the signing of contract	169		
2	**Division: Latifabad -I(Hyderabad Circle)**			215		
3	**Division: Latifabad –II (Hyderabad Circle)**			313		
4	**Division: Qasimabad (Hyderabad Circle)**			505		
5	**Division: Tando Allahyar (Hyderabad Circle)**			427		
6	**Division: Phulelli (Laar Circle)**			176		
7	**Division : Kotri (Laar Circle)**			389		
8	**Division: T.M. Khan (Laar Circle)**			175		
9	**Division : Thatta (Laar Circle)**			230		
10	**Division: Badin (Laar Circle)**			162		
11	**Division: Nawabshah (Nawabshah Circle)**			583		
12	**Division: Sanghar (Nawabshah Circle)**			302		
13	**Division: Tando Adam (Nawabshah Circle)**			237		
14	**Division: Matiari (Nawabshah Circle)**			131		
15	**Division: Mirpur Khas (Mirpur Khas Circle)**			385		
16	**Division: Digri (Mirpur Khas Circle)**			341		
17	**Division: Umer Kot (Mirpur Khas Circle)**			360		
				Total Price B2		
				Total Price of Bid A+B1+B2		

Name of Bidder *[insert complete name of Bidder]* Signature of Bidder *[signature of person signing the Bid]* Date *[insert date]*

Note:- This is tentative list; the final list will be shared at the time of the actual commencement of work.

Section V - Eligible Countries

Eligibility for the Provision of Goods, Works and Non-Consulting Services in Bank-Financed Procurement

In reference to ITB 4.8 and ITB 5.1, for the information of the Bidders, at the present time firms, goods and services from the following countries are excluded from this Bidding process:

Under ITB 4.8(a) & (b); None

Under ITB 5.1 None.

Section VI - Fraud and Corruption

1. Purpose

1.1 The Bank's Anti-Corruption Guidelines and this annex apply with respect to procurement under Bank Investment Project Financing operations.

2. Requirements

2.1 The Bank requires that Borrowers (including beneficiaries of Bank financing); bidders (applicants/proposers), consultants, contractors and suppliers; any sub-contractors, sub-consultants, service providers or suppliers; any agents (whether declared or not); and any of their personnel, observe the highest standard of ethics during the procurement process, selection and contract execution of Bank-financed contracts, and refrain from Fraud and Corruption.

2.2 To this end, the Bank:

a. Defines, for the purposes of this provision, the terms set forth below as follows:

i. "corrupt practice" is the offering, giving, receiving, or soliciting, directly or indirectly, of anything of value to influence improperly the actions of another party;

ii. "fraudulent practice" is any act or omission, including misrepresentation, that knowingly or recklessly misleads, or attempts to mislead, a party to obtain financial or other benefit or to avoid an obligation;

iii. "collusive practice" is an arrangement between two or more parties designed to achieve an improper purpose, including to influence improperly the actions of another party;

iv. "coercive practice" is impairing or harming, or threatening to impair or harm, directly or indirectly, any party or the property of the party to influence improperly the actions of a party;

v. "obstructive practice" is:

(a) deliberately destroying, falsifying, altering, or concealing of evidence material to the investigation or making false statements to investigators in order to materially impede a Bank investigation into allegations of a corrupt, fraudulent, coercive, or collusive practice; and/or threatening, harassing, or intimidating any party to prevent it from disclosing its knowledge of matters relevant to the investigation or from pursuing the investigation; or

(b) acts intended to materially impede the exercise of the Bank's inspection and audit rights provided for under paragraph 2.2 e. below.

b. Rejects a proposal for award if the Bank determines that the firm or individual recommended for award, any of its personnel, or its agents, or its sub-consultants, sub-contractors, service providers, suppliers and/ or their employees, has, directly or

indirectly, engaged in corrupt, fraudulent, collusive, coercive, or obstructive practices in competing for the contract in question;

c. In addition to the legal remedies set out in the relevant Legal Agreement, may take other appropriate actions, including declaring mis-procurement, if the Bank determines at any time that representatives of the Borrower or of a recipient of any part of the proceeds of the loan engaged in corrupt, fraudulent, collusive, coercive, or obstructive practices during the procurement process, selection and/or execution of the contract in question, without the Borrower having taken timely and appropriate action satisfactory to the Bank to address such practices when they occur, including by failing to inform the Bank in a timely manner at the time they knew of the practices;

d. Pursuant to the Bank's Anti-Corruption Guidelines, and in accordance with the Bank's prevailing sanctions policies and procedures, may sanction a firm or individual, either indefinitely or for a stated period of time, including by publicly declaring such firm or individual ineligible (i) to be awarded or otherwise benefit from a Bank-financed contract, financially or in any other manner;1 (ii) to be a nominated2 sub-contractor, consultant, manufacturer or supplier, or service provider of an otherwise eligible firm being awarded a Bank-financed contract; and (iii) to receive the proceeds of any loan made by the Bank or otherwise to participate further in the preparation or implementation of any Bank-financed project;

e. Requires that a clause be included in bidding/request for proposals documents and in contracts financed by a Bank loan, requiring (i) bidders (applicants/proposers), consultants, contractors, and suppliers, and their sub-contractors, sub-consultants, service providers, suppliers, agents, personnel, permit the Bank to inspect[3] all accounts, records and other documents relating to the procurement process, selection and/or contract execution, and to have them audited by auditors appointed by the Bank.

---

1 For the avoidance of doubt, a sanctioned party's ineligibility to be awarded a contract shall include, without limitation, (i) applying for pre-qualification, expressing interest in a consultancy, and bidding, either directly or as a nominated sub-contractor, nominated consultant, nominated manufacturer or supplier, or nominated service provider, in respect of such contract, and (ii) entering into an addendum or amendment introducing a material modification to any existing contract.

2 A nominated sub-contractor, nominated consultant, nominated manufacturer or supplier, or nominated service provider (different names are used depending on the particular bidding document) is one which has been: (i) included by the bidder in its pre-qualification application or bid because it brings specific and critical experience and know-how that allow the bidder to meet the qualification requirements for the particular bid; or (ii) appointed by the Borrower.

3 Inspections in this context usually are investigative (i.e., forensic) in nature. They involve fact-finding activities undertaken by the Bank or persons appointed by the Bank to address specific matters related to investigations/audits, such as evaluating the veracity of an allegation of possible Fraud and Corruption, through the appropriate mechanisms. Such activity includes but is not limited to: accessing and examining a firm's or individual's financial records and information, and making copies thereof as relevant; accessing and examining any other documents, data and information (whether in hard copy or electronic format) deemed relevant for the investigation/audit, and making copies thereof as relevant; interviewing staff and other relevant individuals; performing physical inspections and site visits; and obtaining third party verification of information.

PART 2 – Supply Requirements

Section VII - Schedule of Requirements

Contents

1. List of Goods and Delivery Schedule 87

1. List of Goods and Delivery Schedule

Item No.	Description of Goods	Quantity	Physical unit	Final Destination (Project Site) as specified in BDS	Delivery (as per Incoterms) Date		
					Earliest Delivery Date	Latest Delivery Date	Bidder's offered Delivery date [*to be provided by the Bidder*]
1	Supply of Asset Performance Management System (APMS) *(Ordering Code:* **APMS-MC-S)** for 200KVA Ratings along with allied material required for installation and PITC-UDIL compliant MDC driver software	3500	No.	Project Site as mentioned in **ITB 14.8 (b)(i) ITB 14.8 (a)(iii), (b)(ii) and (c)(v)**	As early as Possible	240 days from the date of signing of the Contract	*[insert the number of days following the date of effectiveness of the Contract]*
2	Supply of Asset Performance Management System (APMS) *(Ordering Code:* **APMS-MC-S**) for 100KVA Ratings along with allied material required for installation and PITC-UDIL compliant MDC driver software	5100	No.				
3	Cable Single Core 300 mm2	140	Km				
4	Cable Single Core 120 mm^2	204	Km				

Name of Bidder *[insert complete name of Bidder]* Signature of Bidder *[signature of person signing the Bid]* Date *[Insert Date]*

2. List of Related Services and Completion Schedule(B1)

Description of Services	Quantity	Physical unit	Place where services shall be performed	Final Completion Date(s) of services
Collection from HESCO stores, transportation, safe handling, and installation of APMS, including the arrangement of all complete accessories (i.e., lugs, PG connectors, **earthing as per specification** , etc.) on **200 kVA Distribution Transformers**, to complete the job in all respects as per site requirements, including preparation of A-90 (Assets Capitalization).	504	No	**Division : Garikhata (Hyderabad Circle)**	365 days from signing of contract
	293	No	**Division: Latifabad -I(Hyderabad Circle)**	
	479	No	**Division: Latifabad –II (Hyderabad Circle)**	
	982	No	**Division: Qasimabad (Hyderabad Circle)**	
	183	No	**Division: Tando Allahyar (Hyderabad Circle)**	
	25	No	**Division: Phulelli (Laar Circle)**	
	100	No	**Division : Kotri (Laar Circle)**	
	50	No	**Division: T.M. Khan (Laar Circle)**	
	75	No	**Division : Thatta (Laar Circle)**	
	50	No	**Division: Badin (Laar Circle)**	
	220	No	**Division: Nawabshah (Nawabshah Circle)**	
	110	No	**Division: Sanghar (Nawabshah Circle)**	
	90	No	**Division: Tando Adam (Nawabshah Circle)**	
	80	No	**Division: Matiari (Nawabshah Circle)**	
	100	No	**Division: Mirpur Khas (Mirpur Khas Circle)**	
	74	No	**Division: Digri (Mirpur Khas Circle)**	
	85	No	**Division: Umer Kot (Mirpur Khas Circle)**	

Note:- This is tentative list; the final list will be shared at the time of the actual commencement of work.

3. List of Related Services and Completion Schedule(B2)

Description of Services	Quantity	Physical unit	Place where services shall be performed	Final Completion Date(s) of services
Collection from HESCO stores, transportation, safe handling, and installation of APMS, including the arrangement of all complete accessories (i.e., lugs, PG connectors, **earthing as per specification**, etc.) on **100 kVA Distribution Transformers**, to complete the job in all respects as per site requirements, including preparation of A-90 (Assets Capitalization).	169	No	**Division : Garikhata (Hyderabad Circle)**	365 days from signing of contract
	215	No	**Division: Latifabad -I(Hyderabad Circle)**	
	313	No	**Division: Latifabad –II (Hyderabad Circle)**	
	505	No	**Division: Qasimabad (Hyderabad Circle)**	
	427	No	**Division: Tando Allahyar (Hyderabad Circle)**	
	176	No	**Division: Phulelli (Laar Circle)**	
	389	No	**Division : Kotri (Laar Circle)**	
	175	No	**Division: T.M. Khan (Laar Circle)**	
	230	No	**Division : Thatta (Laar Circle)**	
	162	No	**Division: Badin (Laar Circle)**	
	583	No	**Division: Nawabshah (Nawabshah Circle)**	
	302	No	**Division: Sanghar (Nawabshah Circle)**	
	237	No	**Division: Tando Adam (Nawabshah Circle)**	
	131	No	**Division: Matiari (Nawabshah Circle)**	
	385	No	**Division: Mirpur Khas (Mirpur Khas Circle)**	
	341	No	**Division: Digri (Mirpur Khas Circle)**	
	360	No	**Division: Umer Kot (Mirpur Khas Circle)**	

Note:- This is tentative list; the final list will be shared at the time of the actual commencement of work.

TECHNICAL SPECIFICATION

Asset Performance Management System (APMS) for Pole Mounted Distribution Transformers

1. SCOPE

1.1 This specification covers Asset Performance Management System (APMS) for Pole Mounted Distribution Transformers

1.2 APMS shall provide following salient features and services for Distribution Transformers on their LT side after incorporating other components of Advance Metering Infrastructure (AMI) network:

a) Real time monitoring and Operation/Controlling
b) Preventive actions against damage of distribution transformers
c) Load disconnection during Fault/ Abnormal Conditions
d) Energy auditing
e) Scheduling of Load Management
f) Human/Equipment Safety

1.3 This specification covers APMS to be used on the LT side of following distribution transformers:

a) 100 kVA Pole Mounted Distribution Transformer
b) 200 kVA Pole Mounted Distribution Transformer

1.4 This specification introduces an optional Oil Temperature and Oil Level Monitoring feature for the Asset Performance Management System (APMS) installed on pole mounted distribution transformers; The feature shall be realized through integration of a dedicated Oil Temperature and Oil Level Sensor Assembly connected to the SMCD directly or through a suitable controller

1.5 This specification introduces:

a) Ordering code provisions,
b) Sensor installation requirements,
c) Controller technical requirements (if used)

1.6 This specification also introduces use of Magnetic Contactor with MCCB for switching operations only.

2. APPLICABLE SPECIFICATIONS AND STANDARDS

2.1 The APMS shall be designed, manufactured, tested and supplied in accordance with (PPMC-PPMC-DS-01:2026 and latest lEC/international/National standards listed in **clause 2.3.**

2.2 In case the requirements laid down herein differ from those given in International/IEC Standards or other local specifications, the requirements listed herein shall prevail.

2.3 Following specifications and latest IEC/ International standards shall be applied:

Standard / Code	Description
DDS-50:2007 (amended to date)	3-Phase Multi-rate (TOD/TOU) Solid-State LT/HT Static Energy Meter
DDS-98:2011 (amended to date)	Specification for Advance Metering Infrastructure
DDS-110:2012 (amended to date)	Meter Data Collection (MDC) Server to be used in AMI
UDIL (latest version)	Universal Data Integration Layer-Multivendor compliant AMI in Pakistan
DDS-80:2007 (amended to date)	LT Current Transformer for metering

IEC 62052-11	Electricity Metering Equipment- General requirements
IEC 62053-21	Electricity Metering Equipment- Static Meters for AC Active Energy (classes 0.5, 1 and 2)
IEC 60947-2	Low voltage switchgear and control-gear – Part 2
IEC 61869-2	Instrument Transformers – Part 2: Additional requirements for current transformers
IEC 60076-22-1	Power transformer and reactor fittings – Protective devices
IEC 60529	Degrees of protection provided by enclosures (IP Code)
IEC 60068-2-2	Environmental testing – Dry heat test
IEC 61439-1	Low-voltage switchgear and control gear assemblies- General Rules
DDS-84:2020	Distribution transformers
IEC 60947-4-1	Low voltage switchgear: contactors and motor starters- electromechanical contactors and motor starters
ISO 2859-1	Sampling procedures for inspection by attributes
IEC 60751	Industrial platinum resistance thermometers and platinum temperature sensors
ISO/IEC 17025	International standard for testing and calibration laboratories

3. ORDERING CODE

3.1 Following ordering codes are applicable for procurement of ARMS.

Ordering Code	Description
APMS-MC-S-***	Standard APMS with Magnetic Contactor and non-motorized MCCB

*** 100 KVA , 200 KVA

4. DEFINITIONS

4.1 **Molded case circuit-breaker (MCCB):**

A mechanical switching device capable of making, carrying and breaking currents under normal circuit conditions and under pre-defined conditions, making, carrying for a given time, and breaking currents under abnormal conditions such as those of short circuits

4.2 **Rated voltage for MCCB:**

The rated voltage of a circuit breaker is the value of voltage which designates it and to which the operating conditions during making or breaking of current.

4.3 **Rated nominal current for MCCB:**

The rated nominal current of a circuit breaker is the value of current which the circuit breaker can carry under test conditions.

4.4 **Rated frequency for MCCB:**

The rated frequency of a circuit breaker is the service frequency for which the circuit breaker is designed.

4.5 **Ambient temperature:**

The average temperature of the air surrounding the complete ARMS Unit.

4.6 **Rated short time current of MCCB:**

The rated short time current of a circuit breaker is the value of prospective short circuit current which the circuit breaker shall be required to carry in the closed position for a specified time and under the test conditions specified.

4.7 **Breaking capacity of MCCB:**

A value of prospective breaking current that a switching device can break at a stated voltage under prescribed condition of use and behaviour.

4.8 **Making capacity of MCCB:**

A value of prospective making current that a switching device can make at a stated voltage under prescribed condition of use and behaviour.

4.9 **Short time withstand current:**

Current that a circuit or a switching device in the closed position can carry during a specified short time under prescribed conditions of use and behaviour.

4.10 **Rated short-circuit breaking capacity for MCCB:**

The rated short-circuit breaking capacity (I_{cs}) for an MCCB, is the maximum prospective symmetrical fault current that the MCCB can safely interrupt under specified test conditions without sustaining damage.

4.11 **Rated short-circuit making capacity MCCB:**

The rated short-circuit making capacity (I_{cm}) for an MCCB, is the maximum prospective symmetrical fault current that the MCCB can withstand for a brief period without sustaining damage during the circuit closing operation.

4.12 **Short time delay:**

Any intentional delay in operation within the limits of the rated short time withstand current.

4.13 **Magnetic contactor:**

A Magnetic Contactor is an electrically controlled switch that uses an electromagnet to open and close a circuit.

4.14 **Static meter:**

A type of electronic energy meter that measures energy consumption using solid- state electronic components, without any moving parts.

5. SERVICE CONDITIONS

5.1 System Conditions:

System Nominal Voltage	415 V
System Highest Voltage	10% of Nominal Voltage
Nominal Frequency	50 Hz

5.2 Climate Conditions:

Ambient Temperature	Maximum	55°C
	Maximum mean over any 24 Hours	40°C
	Mean in any year	30°C
	Minimum	-25°C
Relative Humidity	Up to 100%	
Altitude (above sea level)	Up to 3000 meters	

6. MAJOR COMPONENTS OF APMS

6.1 Asset Performance Management System (APMS) shall be comprised of following components

a) Smart Metering and Controlling Device (SMCD)
b) Current Transformers (CTs)
c) Molded Case Circuit Breaker (MCCB)
d) Magnetic Contactor
e) APMS Enclosure

7. SMART METERING AND CONTROLLING DEVICE (SMCD)

7.1 Smart Metering and Controlling Device (SMCD) shall be in accordance with Specifications DDS- 50:2007, DDS-98:2011, DDS-11O:2O12 (all amended to-date).

7.2 It shall measure, record and display MDI, kWh, kVARh, Power Factor and other specified quantities in compliance with the specifications given in Clause 7.1.

7.3 Metering Accuracy Class shall be 0.5S for kWh and 1.0 for kVARh.

7.4 In addition to above, it shall fulfill following specified requirements:

a) it shall have Communication Module with minimum 4G/GSM/GPRS technology incorporating a SIM card/e-SIM.

b) It shall be able to communicate metering and other data stored in its memory and receive commands/write operations from Head-End System / MDM in accordance with the specifications mentioned in Clause 2 and the requirements stated herein.

c) Auxiliary components/ports essentially required for its Communication with both Head-End System / MDM and MCCB or Magnetic Contactor (whichever is applicable) shall also be provided.

d) It shall have optical communication port which shall perform functions of data reading/writing and parameterization of data. It should be disabled by default however; it can be enabled remotely through HES/MDM as per requirement of concerned utility.

7.5 It should be equipped with a battery. The battery type shall be lithium thionyl chloride (LiSOC12) having minimum capacity of 2000 mAh.

a) Battery manufacturing origins shall be:
   i. Japan (Toshiba, Maxell, Mitsubishi and Panasonic)
   ii. USA (Tadiran, Ultralife and Sonnenchein)
   iii. Germany (Geyer and Varta)
   iv. France (Saft)
   v. South Korea (Xeno)

b) Operational Life of battery shall be minimum five (05) years.

c) Without any Power, the backup battery shall maintain the time, calendar and multi-rate program for a continuous period of at least 5 years.

d) Low Battery indication shall be displayed when minimum 25% battery life is left.

e) Storage/Shelf life of battery shall be more than 15 years.

f) The manufacturing year of Battery should not be more than eighteen (18) Months at the time of offering APMS.

7.6 Super capacitor will be provided for Real-Time Clock (RTC) to maintain date and time for at least 07 days in absence of power.

7.7 In the absence of power, LCD display shall be 'On demand[7] through scroll buttons.

7.8 It shall have provision for following abnormal conditions:

a. Over Voltage
b. Under Voltage
c. Phase Over Current
d. Overload Condition
e. Voltage Unbalance
f. Current Unbalance
g. High Apparent Power

h. High Oil Temperature
i. Low Oil Level
j. Sensor Fault

7.9 Write provision for two (02) setting levels i.e., Alarm and Tripping shall be available for conditions specified in Clause 7.8, Sr. No. (a to d and h). Write provision for one (01) setting level i.e., Alarm shall be available for Sr. No. **(e** to **g** and **i to j).**

7.10 Threshold values of Alarm and Tripping functions and corresponding time settings shall be user programmable locally through optical port or remotely through head-End system/MDM. Once programmed, these function values shall be stored in its memory.

7.11 It shall perform normal operations and tripping operations of MCCB on the basis of programmed threshold values. Events, i.e., Alarm and Tripping shall be communicated to Head-End System/MDM.

7.12 At least 20 events, Alarm and Tripping, for each abnormal condition given in clause 7.8 and normal switching of MCCB/ Magnetic Contactor with date and time stamp shall be provided before rollover.

7.13 It shall be DLMS/COSEM compliant.

7.14 PCB must have conformal coating.

7.15 SMCD manufacturers shall possess valid prototype approval after fulfilling the requirements of this specification and qualifying prototype testing from Design & Standards department, PPMC.

8. CURRENT TRANSFORMER (CT)

8.1 Current Transformers used in APMS shall have following technical parameters as per IEC 61869-2:

Transformer Ratings	CT Ratio	Accuracy Class	VA Burden
100 kVA	200/5A	0.5	2.5 VA (min)
200 kVA	400/5A	0.5	2.5 VA (min)

8.2 CT error limits shall be as under:

Ratio Error (± %) at Current (% of Rated)				Phase Displacement (± Minutes) at Current (% of Rated)			
5	20	100	120	5	20	100	120
1.5	0.75	0.5	0.5	90	45	30	30

8.3 The temperature rise test shall be performed at 120% of rated current as per IEC 61869-2 (latest available)

8.4 Dimensional requirements for the base plate are given in the drawings. Other CT dimensions should be so that they can be adequately fixed on bus bars.

8.5 Other than the requirements stated above, the technical parameters and testing criteria shall be in accordance with DDS-80:2007 (amended to date).

8.6 CT manufacturers shall possess valid prototype approval after fulfilling the requirements of this specification and qualifying for prototype testing from the office of Design & Standards (D&S) PPMC.

9. MOLDED CASE CIRCUIT BREAKER (MCCB)

NON-MOTORIZED MCCB (ORDERING CODES APMS-MC)

9.1 MCCB shall provide protection for the following protection functions:

a. Overload Protection with long inverse time delay trip and trip characteristic with inverse time curves.
b. Short Circuit protection with instantaneous trip.

9.2 MCCB shall be 3P type in compliance with the latest I EC-60947-2 standard and the requirements given in this specification.
9.3 The MCCB shall be manually operated by quick make and quick break mechanism.
9.4 The MCCB shall be mechanically trip-free. ON-OFF breaker position shall be provided with breaker handle/ knob.
9.5 To minimize the effect of arcing, the breaker shall be fitted with arc quenching chamber.
9.6 MCCB technical parameters are given below: -

Rated Voltage:	415/430V
Category	A
Rated Frequency:	50 Hz
Rated Nominal Current:	
100 kVA APMS:	200 A
200 kVA APMS:	400 A
Rated Symmetrical Breaking Capacity:	25 kA (minimum)
Rated Making Capacity:	2x Rated) Symmetrical Breaking Current (min)

Note: If higher rating is to be used considering the unavailability of said ratings, approval from Design and Standards (D&S) is to be sought.

9.7 The breaker shall be equipped with adjustable magnetic/instantaneous /electronic (microprocess based) trip units/Fixed at 10l $_n$ as mentioned in table below. The magnetic/instantaneous (h) or electronic settings shall be in steps or continuously be adjustable in range specified below

Rated Current (Amps)	**Magnetic Trip Setting Range (Amps)**
40	Fixed-400A
60	Fixed-600A
80	Fixed-800A
160	Min 800-1600A
200	Min 1000-2000A
250	Min 1250-2500A
400	Min 2000-4000A
800	Min 4000-8000A
1200	Min 6000-12000A

9.8 The adjustable and instantaneous time lag release settings shall be completely independent of each other.
9.9 MCCB shall trip instantaneously within 50msec.
9.10 Type test reports from independent ILAC accredited international labs or STL approved labs shall be provided. The type test report will be as per latest IEC standard IEC-60947-2 (latest) with additional characteristics given herein.

10. MAGNETIC CONTACTOR

10.1 The Magnetic Contactor shall be used only with ordering codes APMS-MC along with non-motorized MCCB.

10.2 Magnetic Contactor shall be of industrial grade suitable for 415-430 V, 50 Hz system, 3P configuration and coil Voltage of 220-240V AC.

10.3 The Magnetic Contactor shall be rated, Type-2 co-ordination and the AC-6a rating shall be demonstrated either by direct transformer switching test or by derivation from AC-3 rating in accordance with IEC 60947-4-1

10.4 Minimum durability should be mentioned in following quantities in type test reports,

a. Mechanical: minimum 1,000,000 operations.
b. Electrical durability at AC 6a duty: according to IEC standard.

10.5 The contactor shall comply with making and breaking performance requirements as per IEC 60947-4-1 for AC-6a duty.

a) The device shall be capable of safely making and breaking currents under:
   i. Normal operating conditions
   ii. Inductive load switching
b) The making and breaking capacities shall be verified through type tests in accordance with IEC provisions.

10.6 Other technical parameters shall match or exceed Transformer rating and be electrically interlocked with control logic to prevent chattering. Interlocking is required between control logic and switching devices to prevent unintended repeated operations (chattering). This applies to SMCD-contactor-MCCB interaction.

10.7 Contactor should not be used as a protective device. Short-circuit and Overload shall be provided by MCCB, and operational based control and voltage-based control shall be provided by contactor in ordering codes APMS-MC. It is recommended that LT line should be well protected where ordering codes APMS-MC are used and avoided where frequent faults occur on LT lines.

10.8 Contactor coil shall be protected by surge suppressor / RC snubber and contactor coil shall be controlled through an intermediate control interface (relay/driver circuit). Direct energization is avoided to protect SMCD output contacts.

10.9 Type test reports from independent ILAC accredited international labs or STL approved labs shall be provided. The type test report will be as per latest IEC standard IEC-60947-4-1 (latest) with additional characteristics given herein.

10.10 Drawings shall be approved with consultation with DISCOs and OEMs while considering for induction into the system against respective ordering codes (APMS- MC)

11. APMS ENCLOSURE

11.1 Enclosure body and door shall be made from high grade steel sheet of 1.6 mm and 2.3 mm thickness respectively.

11.2 Copper Busbars shall have 98% IACS conductivity and tin plated with minimum thickness of 20 microns.

11.3 Busbars shall have rectangular cross-section with

a. 150mm^2 (min) area for 100 kVA

b. 300mm^2 (min) area for 200 kVA

11.4 Busbars shall be covered with heat shrink LV grade insulation sleeves except the connection points.

11.5 Busbars shall be mounted on Bakelite/ polymer insulators.

11.6 Following clearances shall be maintained in air within the enclosure:

a. Phase to phase 50 mm

b. Phase to earth 25 mm

(where such clearances cannot be maintained like MCCB/Contactor terminals, insulated separators/sleeves shall be used)

11.7 Gland sizes are,

a. For 100 kVA APMS PG-30 (8 Nos)

b. For 200 kVA APMS PG-42 (8 Nos)

11.8 Type tested Bimetallic Lugs (Not provided with ARMS) shall be used for incoming and outgoing cable connections corresponding to the size/cross sectional area of the cables used by DISCOs,

11.9 Mounting of SMCD shall be made on two mounting brackets as per dimensions given in the attached drawings

11.10 Mounting of components i.e., MCCB, contactor (if used) and busbars shall be made on the back plate. No equipment shall be directly mounted on enclosure walls.

11.11 A window of 150x100mm shall be provided and placed on the front door for SMCD display reading. Transparent polycarbonate sheet of 5 mm thickness overlapped on the window by 15mm on all sides shall be fixed on the inner side. It shall be made dust/waterproof using Neoprene Rubber packing.

11.12 Interior and exterior of enclosure surface shall be painted with powder coating paint. Finished color shall be light grey (RAL 7032) and paint thickness shall be 0.100mm minimum at any point on surface. The paint shall be applied as,

a) The surfaces of the MS plate shall be thoroughly cleaned and sand blasted to prepare the metal surface for painting.

b) All the interior and exterior surfaces of the enclosure shall be thoroughly cleaned through the process of degreasing and phosphating to prepare the metal surface for painting. Good quality pretreatment is a mandatory requirement.

c) Oven baked powder coating paint having durable weather resistant properties suitable to be used in coastal area shall be applied.

11.13 Steel sheets and all structural joints shall be welded/bolted together so that entire enclosure is rigid and self-supporting.

11.14 Two MS bolted connectors shall be provided on the outside of enclosure for earthing purposes.

11.15 A flexible tinned copper strap of 6mmSq shall be used for electrical connectivity between door and body for earthing purposes.

11.16 Enclosure door shall have strong hinges, gutter arrangement and Neoprene rubber gasket. Louvers shall be provided on both sides of the ARMS enclosure for cross ventilation as per attached drawings. Vermin proofing shall also be ensured.

11.17 Locking and sealing arrangement of enclosure shall be provided on the outside of door. The earthing terminal of hot dip galvanized MS material with zinc coating of minimum 30 microns.

11.18 Color coding for phase/neutral wiring, CT output wiring, Busbar sleeves shall be red, yellow, blue and black.

11.19 Control and Power circuit diagrams shall be engraved and printed with black color on stainless steel/powder coated Al plate fixed inside the APMS door. All the components shall be shown through symbols in the diagram.

11.20 Following information shall be painted on the APMS enclosure:

a. "APMS for 100 kVA/ 200kVA Transformer[1]' with black color paint on the front door
b. "Danger Symbol" with red color paint on both side walls.

11.21 Following information shall be engraved and printed with black color on a stainless-steel/powder coated Al nameplate and fixed on the front of APMS enclosure:

a. APMS Designed for 25 kVA/ 50 kVA/ 100 kVA/ 200kVA/ 250 kVA/ 400 kVA/ 500 kVA/ 630 kVA Distribution Transformer.
b. Serial No.
c. Rated Voltage (V)
d. Rated Current (A)
e. MCCB Rating (A)
f. Magnetic Contactor Rating (A) (if applicable)
g. CT Ratio
h. Year of Manufacturing
i. P.O No. & Date
j. Warranty Expiry Date
k. Name of Supplier/ Manufacturer
l. Name of DISCO
m. Manufacturer of OTL (for OTL ordering codes only)
n. Low Oil level and Normal Recovery Point (for OTL ordering codes only)
o. Ordering Code

11.22 **Enclosure Tests**

Following tests shall be carried out on the enclosure.

11.22.1 **Visual Inspection**

APMS enclosure shall be visually inspected for any defects mentioned below:

Examination	Defects
Material	Enclosure components not made from specified material.
Finish	Nuts, bolts and washers not galvanized. Busbars not tin- plated. There shall be no dents/rust on the enclosure.
Construction & Dimensions	Enclosure design not in accordance with the drawings. Component missing, improper fittings or not fulfilling Dimensional requirements.
Markings	Markings/ name plate is incomplete or missing.

11.22.2 **Galvanizing Test of Nuts & Bolts and Earthing Terminal**

Nuts, bolts, DA bolts and washers shall be tested in accordance with WAPDA Specification P-82:81 (amended to-date)

11.22.3 **Bus bar Test**

Copper Bus bars shall have electrical conductivity of 98% IACS and Tin coating of 20microns. 11.22.4 **Bakelite/ polymer Insulation Tests** Bakelite/polymer insulator shall withstand 8kV (min) for one minute.

11.22.5 **Temperature rise test**

The temperature rise test shall be carried out on completely assembled APMS enclosure according to IEC 61439-1

11.22.6 **IP class test**

The verification of IP class (IPx5) shall be tested according to IEC 60529.

11.22.7 **Paint Thickness test**

Paint thickness shall be tested using paint thickness gauge and it shall not be less than 0.100mm minimum at any point on surface.

11.23 4x double arming bolts DA-14 {As per PD 56b) along with 2X powder coated channels (As per drawing) for mounting arrangement shall be provided along with the enclosure by APMS manufacturer.

12. FUNCTIONAL REQUIREMENTS OF APMS

12.1 This specification covers minimum level of functional requirements for design, materials, manufacturing, testing and performance of APMS for 100 kVA and 200 kVA rated Distribution transformers.

12.2 APMS shall have functional characteristics as mentioned in clause 12.3 to 12.11.

12.3 It shall communicate all metering data and events as per latest specifications and must be stored inside meter which will be communicated to HES/MDM upon connection as per requirement (As per clause 17.1).

12.4 It shall be able to record, report and perform following switching operations of MCCB or Magnetic Contactor {as per respective ordering code requirements) i.e., disconnect ion/reconnection:

a. Operation Remotely through Head-End / MDM
b. Operation through SMCD (Independent of Head-End System / MDM)
c. Operation through local electrical means (Push buttons)
d. Operation through local mechanical means (Toggle/Operating Handle) only for MCCB.

12.5 It shall record, report and perform specified functions against following abnormal conditions through Head-End / MDM for testing purposes, range of testing values are specified with each condition:

a. Over Voltage (up to 20%, higher than Transformer rated voltage)
b. Under Voltage {up to 20%, lower than Transformer rated voltage}
c. Phase Over Current (up to 20%, higher than per phase rated current)
d. Overload Condition (up to 20%, higher than Transformer rated load)
e. Voltage Unbalance (up to 20%, of Transformer rated voltage between phases}
f. Current Unbalance (up to 20%, of per phase rated current between phases)
g. High Apparent Power (up to 20%, higher than Transformer rated kVA rating)
h. High Temperature (100°C)
i. Low Oil Level (binary values)
j. Sensor fault (binary values)

12.6 Write provision for two (02) setting levels i.e., Alarm and Tripping against conditions specified in Clause 12.5, Sr. No. **(a** to **d & h)** shall be available. For conditions specified in

Clause 12.5, Sr. No. **(e** to **g & i to j)** write provision for one (01) setting level i.e., Alarm shall be available.

12.7 Threshold values of these Alarm and Tripping functions and their corresponding time settings shall be user programmable from Head-End system/MDM. Alarm and Tripping shall occur based on these threshold values. Default Values against different parameters mentioned in clause 7.8 shall be provided by the respective utility/DISCO at the time of placing purchase order.

12.8 Performing Load shedding according to preset time schedule shall be provided.

12.9 SMCD shall be programmed bi-directional by default (in white color).

13. PROTOTYPE APPROVAL

13.1 Supplier/manufacturer shall submit one 01) complete APMS unit, technical data and three (03) sets of drawings for prototype approval in the office of Design and Standards, PPMC.

13.2 All the testing arrangements including boarding, lodging and daily allowance shall be borne by manufacturer.

13.3 All the type testing shall be carried out at an independent accredited laboratory under witnessing of D&S PPMC engineer(s).

13.4 Testing Lab instruments should be calibrated from ILAC/PNAC/STL accreditation bodies.

13.5 Manufacturers shall submit satisfactory field performance of APMS from end user for renewal of prototype (if product is provided to DISCOs). If no product is provided to DISCOs, prototype test compliance can be submitted.

13.6 Following tests shall be performed during prototype testing on complete enclosure: -

a. Visual Examination & Verification of dimensions (as per specified drawings)
b. Verification of Components (as per specified drawings)
c. Power Frequency Test of 2.5 kV shall be applied between all four busbars and between ground for one (01) minute.
d. Enclosure Tests as per Clause 11.22.
e. Complete Functionality Tests of APMS as per Clause 12 (10 Nos. operations against each pre-defined operating condition, Normal and abnormal).

13.7 The firm shall possess testing setup for functionality tests of APMS including three phase Current Injection set with adjustable features. The routine tests can be performed In-House.

13.8 Compatibility certificate is required for sensor assembly with different transformer manufacturers stating that this does not reduce BIL.

13.9 Only PPMC approved sensor assemblies shall be used, (protocols attached in Annex-A).

13.10 Prototyped APMS-CB-OTL doesn't require re-prototyping for APMS-CB-5. However, APMS-CB-S cannot be used as APMS-CB-OTL unless prototyped so. Likewise, APMS-MC-OTL doesn't require re-prototyping for APMS-MC-S. However, APMS-MC-S cannot be used as APMS-MC-OTL unless prototyped so

13.11 For APMS-MC ordering codes, if manufacturer(s) offers their product, the drawings shall be approved as per components and dimensions shall be decided accordingly.

13.12 The validity of Prototype approval will be five (5) years unless there is any change in design or as per PPMC Prototype/Type test Policy.

13.13 The manufacturer must be ISO-9001 and ISO 14001 certified.

14. MASS PRODUCTION TESTS

Following routine and sample tests shall be performed on APMS

14.1 **Routine Tests**

The supplier/manufacturer of APMS shall perform following routine tests on each APMS at their premises and shall maintain its proper record to submit on demand: -

a. Visual Examination & Verification of dimensions (as per approved drawings)
b. Verification of Components (as per approved drawings)
c. Power Frequency Test
d. Complete Functionality Tests of APMS as per Clause 13.

14.2 **Sample Tests**

Following sample tests of ARMS during mass production shall be carried out by Material Inspection, PPMC?

a. Visual Examination & Verification of dimensions, components (as per approved drawings) and calibration certificates (equipment, sensor assemblies)
b. Power Frequency Test 2.5KV)
c. Conductivity test of busbars.
d. Wiring inspection.
e. Fail safe test.
f. Communication verification on MDC.
g. Paint thickness test (0.100mm minimum at any point on surface)
h. Galvanizing test
i. Tin plating test. =>20 Microns)
j. Bakelite dielectric test. (8kV)
k. Alarm generation test

15. SAMPLING, ACCEPTANCE AND REJECTION

15.1 **General:**

15.1.1 All inspections shall be carried out under the supervision of the Purchaser / inspection Authority (Ml, PPMC) unless otherwise specified.

15.1.2 Sample Quantities.

Offered Quantity	No of Samples
Up-to 25	3
Up-to 50	5
Up-to 90	8
Up-to 150	13
Up-to 280	20
Up-to 500	32
Up-to 1200	50
Up-to 3200	80
Up-to 10000	125
Up-to 35000	200

15.2 **Inspection & Acceptance Table:**

Sr. No.	Test Description	Remarks	Acceptance/rejection
1	Visual Examinations Verification of Dimensions	As per approved drawings	i. If more than one sample fails, then the lot shall be rejected. ii. If only one sample out of the selected samples fails, then re-sampling of double size shall be made. The failure shall be documented and with reasons and acknowledgement from all parties. iii. In case, if any other sample from resampling fails, whole LOT shall be rejected, and it would be documented and acknowledged by all parties.
2	Power Frequency Test [2,5 kV)	No breakdown or flashover	
3	Complete Functionality Test of APMS along with alarm generation	Full operational verification	
4	Wiring Inspection	Ferruling, termination, routing	
5	Fail Safe Test	Mandatory zero failure	
6	Communication Verification on MDC	Data transmission & integration	
7	Paint Thickness Test	Corrosion protection	
8	Galvanizing Test (1 item from each sample)	Zinc coating compliance	
9	Tin Plating Test (>20 pm) (1 item from each APMS)	Conductivity & corrosion	
10	Bakelite Dielectric Test (1 item from each APMS)	No breakdown / puncture	

Note: The rejected sample during first sampling shall be rectified before acceptance of LOT

16. INTEROPERABILITY

16.1 For the purpose of ensuring interoperability, the ARMS shall be fully compliant with DLMS/COSEM. Furthermore, for deployments where metering data is managed through the Meter Data Management (MDM) system of Power Information Technology Company, the ARMS, associated MDC and communication interfaces shall mandatorily comply with the requirements of the Universal Data Integration Layer (UDIL) latest version and shall be duly certified by PITC ensuring seamless integration, standardized data exchange and avoidance of vendor-specific dependencies.

17. PACKING

Each ARMS Unit shall be supplied duly packed to withstand rigors of rail/road transportation. The Glands shall not be damaged. DA bolts, Chanels for mounting arrangements shall also be provided. Moreover, it shall be protected against entry of moisture, rainwater and dust by covering with suitable bubble wrap sheet.

18. WARRANTY

18.1 The complete ARMS, including all associated components such as MCCB, SMCD, Magnetic Contactor, OTL sensor assembly, and enclosure (as applicable per the ordering code), shall be warranted for a period of five (05) years from the date of supply or completion of the specified duty cycles (for MCCB and Magnetic Contactor), whichever comes earlier. In the absence of recorded duty cycle data, the warranty period shall be considered five (05) years from the date of supply.

18.2 During the warranty period, the manufacturer/supplier shall be responsible for rectification or replacement of any defective components arising due to design, material or workmanship issues at no additional cost to the purchaser. The fault evaluation report shall jointly be made with representative of DISCO, Ml and D&S to ascertain the root cause.

18.3 The warranty shall cover all electrical, mechanical and communication components including battery performance as per specified operational life.

Annex - A

PPMC APPROVAL PROTOCOL FOR SENSOR ASSEMBLY

A- Type Approval (Mandatory Before OTL Prototype for OTL OEM)

Documents Required:

1. Design drawings
2. Mounting arrangement (DDS-84 compatibility)
3. Material specifications
4. Calibration procedure

Type Tests (Mandatory)

Test	Standard	Purpose
Accuracy test(±2°C) (Sensor & controller)	ISO/IEC 17025	Standard governing calibration of equipment reference standard. Against a traceable
Pressure test (6 PSI / 15 PSI)	DDS-84:2020 (to date)	Tank conditions
Temperature endurance (-20 to 125°C)	IEC 60068-2-1 / 2-2	Environmental suitability (correct readings)
IP test (IP65)	IEC 60529	Dust + water protection
Vibration test	IEC 60068	Field robustness

Impulse test (with sensor installed) on at-least 2x Transformers (25kVA) of different manufacturers or as per D&S PPMC requirements	IEC 60076-3
Functional test (low level / high temp alarms)	Operational
Fitment verification	OEM certification

PPMC APPROVAL PROTOCOL FOR CONTROLLER (if used)

Test	Standard	Purpose
Power consumption	IEC 60076-22-1 <5 Watts	Efficiency
Dry heat test	IEC 60068-2-2	Thermal endurance
IP test (IP54)	IEC 60529	Enclosure protection
EMC test	IEC 61000 series	Interference immunity

Note: All tests shall be performed at an independent Lab

Annex-B

SCHEDULE OF TECHNICAL DATA

1. APMS:

Sr. No.	Description	Offered Value	Compliance	Remarks
1	Manufacturer Name			
2	Type / Model / Designation			
3	Applicable Standards (DDS / IEC)			
4	Rated Voltage (V)			
5	Rated Frequency (Hz)			
6	APMS Rating (25/50/100/200/400/630 kVA)			
7	Degree of Protection (Enclosure IP)			
8	Ambient Temperature Range			
9	Maximum Altitude			
10	Functional Compliance (as per Clause 13)			
11	Alarm & Tripping Logic Details			
12	Field Performance Evidence			
13	Compliance with PPMC-DS-01:2026			
14	Weight			

2. MCCB NON-MOTORIZED.

Sr. No.	Description	Offered Value	Compliance	Remarks
1	Manufacturer Name			
2	Model / Frame Size			
3	Standard (1 EC 60947-2) compliance			
4	Rated Voltage (V)			
5	Rated Current (In)			
6	Number of Poles (3P)			
7	Breaking Capacity (leu, kA)			
8	Service Breaking Capacity (les, % of leu)			
9	Making Capacity (I cm)			
10	Thermal Setting Range (I r)			
11	Magnetic Setting Range (I m)			
12	Type of Trip Unit (Thermal-Magnetic/ Electronic)			
13	Mechanical Endurance			
14	Electrical Endurance			
15	Type Test Reports (ILAC Lab)			
16	Compliance with PPMC-DS-01:2026			
17	Weight			
18	Manufacturer Name			
19	Model / Frame Size			
20	Standard (1 EC 60947-2) compliance			
21	Rated Voltage (V)			
22	Rated Current (In)			

3. MAGNETIC CONTACTOR

S. No.	Description	Offered Value	Compliance	Remarks
1	Manufacturer Name			
2	Model / Type			
3	Standard (IEC 60947-4-1)			
4	Rated Operational Voltage (V)			
5	Rated Frequency (Hz)			
6	Rated Current (AC 6a duty)			
7	Utilization Category (AC 6a)			
8	Coil Voltage (V)			
9	Mechanical Endurance (operations)			
10	Electrical Endurance (AC 6a duty)			
11	Making Capacity			
12	Breaking Capacity			
13	Surge Protection (RC / MOV)			
14	Electrical Interlocking with MCCB			
15	Coordination Type (Type 2)			
16	Type Test Reports (ILAC Lab)			
17	Compliance with PPMC-DS-01:2026			
18	Weight			

4. SMCD

S. No.	Description	Offered Value	Compliance	Remarks
1	Manufacturer Name			
2	Model /Type			
3	Standards (DDS-50, 98,110 / IEC 62052/53) compliant			
4	Accuracy Class (kWh / kVARh)			
5	Communication Technology			
6	DLMS/COSEM Compliance (Yes/No)			
7	Optical Port Availability			
8	Auxiliary Ports (MCCB Interface)			
9	Battery Type & Capacity			
10	Battery Backup Duration			
11	RTC Backup (Supercapacitor)			
12	Event Logging Capacity			
13	Alarm & Trip Configurability			
14	Remote Operation Capability			
15	Firmware Upgrade Capability			
16	PTA Compliance (for communication)			
17	Type Approval (PPMC)			
18	DLMS Certification Attached			
19	Weight			

Note:- Above comprehensive technical specification has been derived and in consistent with Power Planning And Monitoring Company Specification No. PPMC-DS-01:2026.

TECHNICAL SPECIFICATION

SHEATHED INSULATED DISTRIBUTION CABLES

600 VOLTS (SID CABLES)

AMENDMENT NO.1

DATED 26th January 2010

Clause 12.3.3. is added as under:

12.3.3. Wrapping Test:

Out of all finished length, 1 % lengths of cables randomly selected shall be subjected to the wrapping test

12.3.3.1 Procedure:

The aluminium wire shall be wrapped round a mandrel of diameter equal to the wire, diameter to form a close helix of eight turns. Six turns shall then be unwrapped and again closely wrapped.

The wire shall not break or show any cracks.

AMENDMENT NO. 2

DATED 7TH JUNE 2010.

Change the values in Sub Clause 4.3.1 Table-II, 1 (b)

“Shaped Conductor” (Minimum No. of strands) be read follow:

10mm^2	25mm^2	70mm^2	120mm^2	185mm^2	300mm^2
-	6	12	15	30	30

SPECIFICATION

SHEATHED INSULATED DISTRIBUTION CABLES

600 VOLTS (SID CABLES)

0. FOREWORD

0.1. This Specification has been prepared by the Standards Directorate of Design Distribution Department.

0.2 This Specification is intended only for the procurement of material and does not include all the necessary provisions of contract

0.3 This Specification is subject to revision as and when required.

0.4 This Specification super cedes product description PD-25,26a,27a; 28b & 29 and DDS-8:84.

1 SCOPE

1.1 This Specification covers single core, single core underground, two core, four core armoured and four core unarmoured cables for use in 415/240 Volts distribution system. It covers the sizes which have been standardized for use in WAPDA. This Specification covers the. cables, which will be commonly known as "SID Cables".

2 SERVICE CONDITIONS

2.1 The cable shall be suitable for operation in a 415/240 volts, 50Hz. three phase multiple neutral earthed distribution system.

2.2 The single core underground and four core armored cable shall be suitable for direct burial, rest of the cables shall be suitable for installation in air or running in the ducts. The duct and soil conditions vary from dry to wet. Highly corrosive salts are encountered in the soil.

2.3 Ambient Temperature:

Maximum.	50 °C
Max: meanover 24 hours.	45 °C
Mean in the year.	39 °C
Minimum.	-10 °C

2.4 Relative humidity may range upto 100%.

2.5 The cables shall be suitable for conductor operating temperature as follows :-

Continuous operation.	70 °C
Short circuit(5 sec. maximum duration)	160 °C

3. TYPES AND SIZES OF CABLES

3.1 The types and sizes of cables which have been standardized are given in Table-:-

TABLE -1

Sr.No	Type of Cable	
1	Single core cable.	25, 70, 120, 185, 300
2	Single core underground cable.	25, 70, 120, 185, 300
*3	Two core cable.	10, 25
**4	Four core unarmoured cable	10, 25, 70, 120, 185, 300
5	Four core armoured cable	10, 25, 70, 120, 185, 300

.

* 2 core 25mm^2 cable has also been standardized under twisted Unsheathed Distribution Cables.

** Four core 25, 70 & 95mm^2 cables have also been standardized under twisted Unsheathed Distribution Cables to be used in the narrow and zig zag streets of Cities and Villages as main and sub main distribution lines. Specified in DDS-185

4. CABLE CONSTRUCTION

4.1. Single Core Cable (unarmoured)

4.1.1. The conductor shall consist of circular stranded aluminium of electrical grade purity as specified in IEC 228:78.

4.1.2. The insulation shall be extruded polyvinyl chloride compound over the conductor The polyvinyl chloride compound shall have properties as given in clause 8 of this Specification and shall be suitable for continuous conductor temperature of 70 °C.

4.2. Single Core Underground Cable (Armoured)

4.2.1 The conductor shall be as given in clause 4.1.1.

4.2.2. The insulation shall be extruded polyvinyl chloride compound over the conductor. An extruded polyvinyl chloride compound sheath shall be applied over the insulation. General purpose PVC shall be used both for insulation as well as sheath and shall be suitable for continuous conductor temperature of 70 °C.

4.3. Two Core Cable

4.3.1. The construction of individual cores of the two core cable shall be the same as single core cable.

TABLE-II

Sr. No.	ITEM	Nominal Cross Sectional Area of Conductor					
		10mm²	25mm²	70mm²	120mm²	185mm²	300mm²
1	Conductor (i) Stranding (Minimum No. of strands / nominal dia of each strand, mm)						
	a) Circular conductor (non compacted)	7/1.35	7/2.14	19/2.14	37/2.03	37/2.52	61/2.52
	b) Shaped conductor (No. of strands)	-	7	19	37	37	61
	(ii) Weight of Conductor Kg/Km	27.7	69.5	189	331	509	839
2	Max Conductor D.C. resistant at 20deg C (ohm/km) for single core and multi core cables	3.08	1.2	0.443	0.253	0.164	0.1
3	Nominal insulation thickness for: a) Single core cable (mm)	-	1.5	1.98	2.3	2.3	2.74
	b) Multi core cable (mm)	1.2	1.42	1.64	1.66	2.3	2.74
4	Nominal thickness outer sheath a) Single core underground	-	1.4	1.6	2.05	1.97	2.74
	b) Two core	1.8	1.8	-	-	-	-
	c) Four core unarmoured cable	2.1	2.1	2.6	3.2	2.96	3.4
	d) Four core armoured cable	2.08	2.1	2.52	3.08	3.147	3.51
5	Nominal thickness (mm) of bedding for four core armoured cable	1.64	1.8	2.36	2.61	2.7	2.87
6	Dia of armoured wire (mm) for four core armoured cable only	1.6	1.6	2.1	2.64	2.5	3.175

Note: The above values generally conform to the values given in IEC standards, but some of values have been modified due to extreme weather conditions of Pakistan.

4.3.2. The core shall be laid flat and sheathed with a black PVC compound.

4.4. Four core Unarmoured Cable

4.4.1 The individual core of cable below 25mm sq. shall be of circular stranded cross-section while those 25mm sq. and above may either be of circular cross section or shaped cross section. The shaped cross section cable shall conform to IEC-228:78.

4.4.2 Circular Stranded Cross-Section Cables

4.4.2.1 The four individual cores shall be laid up together with a right hand lay. A right hand lay is defined as clock-wise twist away from the observer.

4.4.2.2 The laid up cores shall have PVC/Polypropylene fillers both at the centre and the outer sides to give the cable a round shape. Thickness of the sheath over the cores shall be according to Table-ll of this Specification.

4.4.2.3 Polypropylene binding tap having a thickness of 35 micron and above shall be wrapped over the laid up cores and fillers with a fifty percent overlap.

4.4.2.4 The polypropylene fillers twin are of suitable tex having a softening point not less than 150°C.

4.4.3. Shaped Stranded Cross-Section Cables

4.4.3.1 The laid up shall have PVC/Polypropylene fillers both at the centre and the outer sides to give the cable a round shape.

4.4.3.2 Polypropylene binding tap having a thickness of 35 micron and above shall be wrapped over the laid up cores and fillers with a fifty percent overlap.

44.3.3 Polypropylene binding tap shall have the property of splitting longitudinally but no latitudinally.

4 4.3.4 The PVC shall be applied over the cores having the thickness as per Table-ll.

4.5 Four Core Armoured Cable

4.5.1 The construction of the four-core armoured cable shall be the same as of f our core unarmoured cable with the exception that a single layer of galvanized steel wire shall, be. applied over the extruded PVC bedding. The direction of armour wire shall be left handed A PVC sheath shall be applied over the armour wire, thickness of PVC sheath shall be as per Table-ll.

5. CORE IDENTIFICATION

5.1 The cores of all cables shall be identified by colours in accordance with following sequence:-

Sr. No.	Type	Colour
1.	Single Core cable	Black
2.	Two Core cable	Red, Black
3.	Four Core cable	Red, Black, Light Blue and either Yellow or Green

6. DIMEN SIONS

6.1 The dimension of conductors shall be in accordance with Table-I The cross-sectional. area of conductor shall be the sum of the areas of its component wires. The stranding of conductor shall be as given in Table-ll

6.2 For 2-Core, 10mm sq, Cables

6.2.1 The tolerance /Nominal values mentioned in this specification be so adjusted that the overall size of 2-core, 10 mm sq cable should remain within the following limits:-

(a) Width Wise 15.0 mm (Minimum)
16.5 mm (Maximum)

(b) Depth/Height wise 9.2 mm (Minimum)
10.1mm (Maximum)

6.2.2 There should be no gap between insulation and sheath.

7. CONDUCTOR

7.1 The conductor shall be 3/4th hard drawn stranded aluminum conforming to IEC 228:1978.

7.2 For circular conductor, the successive layers shall have opposite direction of lay, the outer most layer being right handed. The wires in each layer shall be evenly and closely stranded.

7.3 For sector shaped conductor only nominal areas and maximum D.C. resistance are to be checked.

7.4 Tolerance

7.4.1 ±1% tolerance is allowed on diameters of individual strands of circular conductors only. This tolerance is not applicable for sector shaped conductors.

8.0 POLYVINYL CHLORIDE FOR INSULATION AND SHEATH

8.1 The insulation and sheath shall be made from polyvinyl chloride compound type 'A' conforming to IEC 502:78 and shall be suitable for service conditions described in clause. 2 of this specification. The polyvinyl compound shall meet the following properties.

8.2 Original Physical Properties

a) Minimum tensile strength 125 N/mm^2 OR 1.27kg/mm^2
b) Minimum elongation at break 150 percent.

8.3 Properties After Ageing in Air Oven

Ageing Conditions

Temperature. 80 ± 20 °C

Duration of treatment. 168 hour

a) Tensile strength after ageing, percentage of unaged — Max 120, Min. 80

b) Elongation at break after ageing, percentage of unaged — Max 120, Min. 80

8.4 Heat Shock Test

Test conditions :

Temperature. 150 ± 2 °C

Duration of treatment. 1 hour

Result obtained. No Cracks

8.5 Heat Distortion

Temperature	80 ± 2 °C
Time under load	First case 4 hours (for cables up to conductor size of 35mm sg.) Second case 6 hours (for cables having conductor size more than 35mm sg.)
Maximum percentage distortion	50%

8.6 Cold Bend Test

Test conditions::

Temperature.	-15 ± 2 °C
Result to be obtained	No Cracks

8.7 Resistance to Burning

Self extinguishing.

8.8 Colour Fastness

The colour of insulation and sheath shall fast to both, water and to sun light

9. INSULATION

9.1 The insulation shall be made of polyvinyl chloride compound described in clause 8. The nominal insulation thickness shall be according to Table-ll.

9.2 Tolerance

9.2.1 The insulation thickness given in Table-ll are based on rated voltages.

9.2.2 The average thickness of the insulation shall not be less than the specified nominal value.

9.2.3 Thickness at any place may however be less than the specified nominal value provided the difference does not exceed 0.1mm + 10% of the specified nominal value.

10. SHEATH

10.1 The sheath shall be made of polyvinyl chloride compound described in clause 8 of this specification. The nominal sheath thickness shall be in accordance with Table-ll.

10.2 Tolerances

10.2.1 The average thickness of the sheath shall not be less than the specified nominal values.

10.2.2 The thickness at any place may however be less than the specified nominal value provided the difference does not exceed 0.1 mm + 10% of the specified nominal value.

11. ARMOURING

11.1 Bedding (Inner covering & Filler)

11.1.1 The bedding for four core armoured cable shall consist of an extruded Layer of PVC, general purpose PVC Shall be used. Nominal thickness of bedding shall be as given in Table-ll. The PVC for the bedding shall meet the requirements laid down in clause 8 of this specification.

11.1.2 The average thickness of bedding shall not be less than the specified nominal values.

11.1.3 The thickness at any place may however be less than the specified nominal value provided the difference does not exceed 0.1 mm + 10% of specified nominal value.

11.2 Wire Armour

11.2.1 Wire armour shall consist of a single layer of galvanized steel wires and the nominal diameters of round armour wire shall be as given in Table-ll. The direction of lay of armour shall be left hand. The armour wire shall have following properties :-

a) The wire shall be of good uniform quality of circular cross-section free from splinters, irregularities and brittle places, and capable of being welded.
b) The tensile strength shall not be less than 37.8 kg/ mm ^{2} and not more than 50. kg/mm^2.
c) The elongation at break shall not be less than 12 percent.
d) The dimensions of armour wires shall not fall below the nominal values by more than 5%.

12. TESTS

12.1 Electrical Sample Tests for PVC insulation & Sheath

12.1.1 The PVC insulation and sheath shall be subjected to following tests:

i. Insulation resistance measurement at room temperature.
ii. Insulation resistance measurement at maximum rated temperature.
iii. High voltage alternating current test.

12.2 Non-Electrical Sample Tests for PVC Insulation & Sheath

i. Measurement of thickness of insulation and sheath.
ii. Tests for determining the mechanical properties of insulation before and after ageing.
iii. Weight loss test.
iv. Heat distortion test.
v. Heat shock test.
vi. Test for the behavior of PVC at low temperature, (cold bend test)
vii. Colour fastness test.
viii. Accelerated water absorption test.

ix. Resistance to burning.

12.3 Routine Test

12.3.1 Out of all finished lengths, 10% lengths of cables randomly selected shall be subject to the following tests:-

i) Conductor resistance test
ii) A.C. Voltage

12.3.2 The manufacturer shall maintain record of Routine Tests carried out during the manufacturing process, which may be seen by the Inspector while undertaking testing as described in clause 12.3.1 above.

13. TEST SAMPLES, ACCEPTANCE AND REJECTION

13.1 The manufacturer shall afford to the inspector all necessary test facilities and assistance for carrying out the tests. The facilities shall be provided free of charge.

13.2 The manufacturer shall divide each consignment into lots for inspection. These lots shall be so selected that material in a lot is of reasonably uniform quality and as far as possible is manufactured at the same time and under the same conditions. The manufacturer shall keep sufficient production records to ensure that this can be done regularly. The lot size shall consist of any number of lengths up to a maximum of as follows

i. Single core/Two core cables 500 lengths.
ii. Four core cables 100 lengths.

13.3 From each lot, regardless of its size, samples of cables shall be taken at random from the following lengths of cables: -

i. Single core/Two core cables 2 lengths.
However, if the samples so taken from the offered lots are less than 10 lengths then 10 lengths shall be subjected to the tests.

ii. Four core cables 2 lengths
However, if the samples so taken from the offered lots are less than 5 lengths then 5 lengths shall be subjected to the tests.

One sample sufficient to provide the required No. of specimens for each test,

shall be taken from each cable, single core or multi-core, in each of the selected lengths.

13.4 The samples taken shall be subjected to each of the tests prescribed in clause 12.1 and 12.2. The lot shall be accepted, if for each test, the sample complies with the requirements of clause 13.5.

13.5 If in any test one sample fails, the whole of, the respective lot shall be rejected.

14 **TEST METHODS**

14.1 Electrical Sample Test for PVC Insulation & Sheaths

The cable shall be subjected to the following tests, applied successively on the same sample of cable, 10 m to 15 m in length. The test shall be limited to not more than 3 cores.

14.1.1 Insulation Resistance Measurement at Room Temperature

a) This test shall be made on the sample length before any other electrical test. All outer covering shall be removed, and the core shall be immersed in water at room temperature at least 1 hour before the test. The measurement shall be made between conductor and water. The measurement may be confirmed at 20+1 °C. The D.C test voltage shall be 300 V to 500 V, and shall be applied for a sufficient time to reach steady measurement, but for not less than 1 min.

b) Calculations The volume resistivity and/or the insulation resistance constant shall be calculated from the insulation resistance by the formula given below-

$$f = \frac{2X\ TT\ LR}{\log_e\ D/d}$$

Where :

f = Volume resistivity in ohm centimeters

R= Measured insulation resistance in ohms.

L= Length of the cable in centimeters.

D= Outer diameter of the insulation in millimeters,

d = Inner diameter of the insulation in millimeters.

Also, the "insulation resistance constant Ki" may be calculated, using the formula

$$Ki = \frac{LR \times 10^{-11}}{\text{Log } w\ D/d} = 10 \times 0.367 / M\ \Omega\ Km$$

c) Requirements: The values calculated from the measurement shall not be less than those specified in Table III given below:

TABLE - III

Electrical, Type Test Requirements

Designation of the insulating compounds	PVC
- Maximum rated conductor temperature (C°)	70
- Volume resistivity (Q cm) - at 20°C	10^{13}
- at max: rated temperature (70 °C)	10^{10}
- Insulation resistance constant Ki. - at 20°C	(M Ω Km) 36.7
- at max: rated temperature (70°C)	0.037

14.1.2 Insulation Resistance Measurement at Maximum Rated Temperature

a) The core of the cable sample with all outer covering removed shall be immersed in water which shall be heated at the specified temperature for at least 1 hour before test. The D.C test voltage shall be 300 V to 500 V and shall be applied for a sufficient time to reach steady measurement, but not less than 1 min.

b) Calculations: The volume resistivity and/or the insulation resistance constant shall be calculated from the insulation resistance by the formula given in sub clause 14.1.1.b.

c) Requirements: The values calculated from the measurements shall not be less, than specified in Table-III given above in sub clause 14.1.1 .c.

14.1.3 High Voltage Alternating Current Test

a) Procedure: The cores of the cable sample with all outer coverings removed shall be immersed in water at room temperature for at least 1 hour.
A power frequency voltage equal, to three times the rated voltage shall be gradually applied and maintained continuously for 4 hours between the

conductor and the water.

b) Requirements: No break down shall occur.

14.2 Non-Electrical sample Tests for Insulation & Sheaths

14.2.1 Measurement of Thickness of Insulation

a) Sampling: One sample of each cable core shall be taken from each of three places separated from each other by at least 1 m. For cables having more than three cores of equal nominal cross-section, the number of cores on which the measurement is made shall be limited to three cores or 10% of the cores, which ever is large

b) Procedure: The measurement shall be made as described in clause 4 of IEC Publication 540.

c) Requirements The average, which shall be rounded off to the nearest 0.1 mm of all the measured values on each core shall not be less than the specified nominal thickness and the smallest measured value shall not fall below 90% of the specified nominal thickness by more than 0.1 mm.

14.2.2 Measurement of Thickness of Sheaths

a) Sampling: One sample of cable shall be taken from each of three places separated from each other by at least 1 m.
b) Procedure: The measurements shall be made described in clause 4 of. IEC Publication 540.
c) Requirements: Each piece of sheath shall comply with the following

The average, which shall be rounded off to the nearest 0.1 mm of the measured values shall not be less than the specified nominal thickness. The smallest value shall not fall below 90% of the specified nominal thickness by more than 0.1 mm.

14.2.3 Test for Determining the Mechanical Properties of Insulation Before and After Ageing

a) Sampling: Sampling and the preparation of the test pieces shall be carried out as described in clause 5 of IEC Publication 540.

b) Ageing Treatment: The ageing treatments shall be carried out as described in clause 6 of IEC Publication 540 under the condition specified in clause 8.3 of this specification.

c) Conditioning & Mechanical Tests: Conditioning and the measurement of mechanical properties shall be carried out as described in clause 5 of IEC

Publication 540.

d) Requirements: The test results for unaged and aged test pieces shall comply with the requirements given in clauses 8.2 and 8.3 of this specification.

14.2.4 Tests for Determining the Mechanical Properties of Sheaths Before and After Ageing

a) Sampling: Sampling and the preparation of the test pieces shall be carried out as described in clause 5 of IEC Publication 540.

b) Ageing Treatments: The ageing treatments shall be carried out as described in clause 6 of IEC Publication 540, under the conditions specified in clause 8.3 of this specification.

c) Conditioning and Mechanical Tests: Conditioning and measurements of mechanical properties shall be carried out as described in clause 5 of IEC Publication 540.

d) Requirements: The test results for unaged and aged test pieces shall comply with the requirements given in clauses 8.2 & 8.3 of this specification.

14.2.5 Additional Ageing Test on Pieces of Completed Cables

a) General This test is intended to check that the insulation and sheath are not liable to deteriorate in operation due to contact with other components in the cable.

The test is applicable to the cables of all types.

b) Sampling; Samples shall be taken from the completed cable as described I n clause 6 of IEC Publication 540.

c) Ageing Treatment: The ageing treatment of the pieces of cable shall be carried out in an air oven, as described in clause 6 of IEC Publication 540, under the following conditions:

Temperature: 10+2°C above the rated operating conductor temperature of the cable or, if the operating temperature of the cable is not known, 10+2°C above the rated operating conductor temperature for the insulating material.

Duration 168 hours.

d) Mechanical Tests: Test pieces of insulation and sheath from the aged pieces of cable shall be prepared and subjected to mechanical tests as described in clause 6 of IEC Publication 540.

e) Requirements: The variation between the medium values of tensile strength and elongation at break after ageing and the corresponding values obtained without ageing (See sub-clauses 14.2.3 and 14.2.4) shall

not exceed the values applying to the test after ageing in an air oven specified in clause 8.3 of this specification.

14.2.6 Weight Loss Test on PVC Insulation and Sheaths

a) Procedure: The sampling and complete test procedure shall be in accordance with clause 7 of IEC Publication 540.

b) Requirements: The test results shall comply with the following requirements:

Treatment: 80+2 °C

Max: possible loss of mass. 2 mg/cm^2

14.2.7 Test for the Behavior of PVC Insulation and Sheaths at High Temperatures (Heat Distortion Test)

a) Procedure: The sampling and test procedure shall be in accordance with clause 8 of IEC Publication 540 employing the test conditions given in clause 8.5 of this specification.
b) Requirements: The test results shall comply with the requirements given in clause 8.5 of this specification.

14.2.8 Test for Behavior of PVC Insulation and Sheath at Low Temperatures (Cold Bend Test)

a) Procedure: The sampling and test procedure shall be in accordance with clause 9 of IEC Publication 540, employing the test temperature specified in clause 8.6 of this specification.
b) Requirements: The results of the tests shall comply with the requirements given in clause 8.6 of this specification.

14.2.9. Test for Resistance of PVC Insulation and Sheaths to Cracking (Heat Shock Test)

a) Procedures The sampling and test procedure shall be in accordance with clause 10 of IEC Publication 540, the test temperature and period of heating being in accordance with clause 8.4 of this specification.

b) Requirements: The results of tests shall comply with the requirements given in clause 8.4 of this specification.

14.2.10. Colour Fastness Test for Sheaths & Insulation

14.2.10.1 Colour Fastness to Water

A piece of core about 100 mm, long, from which the conductor has been

removed (or a piece of sheath about 100 mm long, from which the cores have been removed) -shall be cut into small pieces and then immersed in, about 10 times its own volume, of distilled water for 48 hours at a temperature of 70°C. At the end of this period the water shall be examined. Requirement as per clause 8.8 of this specification.

14.2.10.2. Colour Fastness to Day Light

14.2.10.2.1 The test will be considered as a sort of type test but will be carried out one In a purchase order.

14.2.10.2.2 This test shall be made in accordance with method 507 A, in BS 2782 : Part 5. Requirement as per clause 8.8 of this specification.

14.2.11 Accelerated Water Absorption Test

14.2.11.1 Gravimetric Method

14.2.11.1.1 Test Specimen

A 275 mm test specimen of the insulated conductor shall be taken if the weight of the specimen is less than 100 grams. For heavier specimens, a segment of the insulation 100mm long and 25mm wide shall be out from the insulated conductor and smoothed to remove all corrugations.

14.2.11.1.2 Preparation of Test Specimen

The surface of the test specimen shall be cleaned by scrubbing with a lint less cloth moistened with water. The specimen shall be dried for 48 hours at 70°C and then weight to the nearest milligram, weight, A. The area, S, shall be the number of square centimeters in a 254 mm length of the insulated wire or the total area in square centimeter of the segment. The insulated wire specimen shall be bent in the shape of a U around a mandrel having a diameter not less than three times in tightly fitting holes in the cover of a 1 -point glass jar so that 254mm of the specimen will be immersed when the jar is completely filled with water and cover applied.

14.2.11.1.3 Immersion of Specimen

The test specimen shall be immersed in freshly boiled distilled water at 70°C for 168 hours. The level of the water shall be maintained flush with the under surface of the cover during the soaking period. The segment shaped specimen shall be completely immersed. After the specimen has been immersed for 168 hours, the water shall be cooled to room temperature. The specimen shall he removed and the adhering water shaken off. The specimen shall be bolted lightly with lint less cloth and weighed within 3minutes to the nearest milligram, weight B. The specimen shall be dried in a vacuum of 5 millimeters of mercury or less over calcium chloride at 70°C for 48 hours and then weighed to the nearest milligram, weight C.

14.2.11.1.4 Calculation

The water absorption shall be calculated in terms of milligrams per square centimeter of surface as follows :

(if C is less than A) = B-C / S

Water absorption

(if C is greater than A) = B-A / S

Where:

A= Weight of the specimen in milligrams before immersion.
B= Weight of the specimen in milligrams after immersion.
C= Weight of the specimen in milligrams after drying in vacuum.
S= Total area in square centimeter of the test specimen.

14.2.11.1.5 Requirements:

Max: water absorption = 1.5mg/cm^2

14.2.12 Resistance to Burning.

a) Procedure: Compliance is checked by the following test which is made on three samples of the completed flexible cable each 30 cm long. The test is made? in still air with a Bunsen burner, having a nozzle, with an internal diameter of 9mm burning town gas. With the burner „in the vertical position, the flame is adjusted so that the over-all height of the flame is 10cm with an inner blue cone of 5 cm. The burner is then supported so that its axis is at an angle of 45 degree to the vertical The sample is held vertically, in such a position that the tip of the inner cone of the flame touches the surface of the sample at a distance of approximately 10cm from its lower end. The sample is held in the flame for 1 minute. If the insulation or sheath burns, it shall do so slowly and the burning shall not spread-appreciably; any flame shall have died out in less than 30 seconds after removal of the burner.

b) Requirement: The insulation and sheath shall be self-extinguishing.

14.3 Routine Tests

The routine tests shall normally be carried out on all finished cable lengths. The routine tests required by this standard are:-

14.3.1 Measurement of Electrical Resistance of Conductor

a) Sampling: For multi-core cables the measurement shall be made on all the conductors of each insulated conductor selected for the routine tests.

b) Procedure: The complete cable length, or a sample there from, shall be in the test room, which shall be maintained at reasonably constant temperature, for at least 12 hours before the test. If it is doubtful whether the conductor temperature is the same as the room temperature,, the resistance shall be measured after the cable has been in the test room for 24 hours. Alternatively, the resistance shall be measured on a sample of conductor contained for at least 1'hour in a temperature controlled oil bath. The measured value of resistance shall be corrected to a temperature of 20°C and 1 KM length in accordance with the formula and factors given in clause 6 of IEC-228:1978.

c) Requirements: The DC resistance of each conductor at 20°C shall not exceed the appropriate maximum value specified in Table-ll of this specification.

14.3.2 Alternating Current Voltage Test

The test shall be made at room temperature with an alternating voltage approximately of sine wave form having a frequency in the range 40 Hz. to 62 Hz. The value of voltage shall be 3000 volts.

a) For armoured cable the voltage shall be applied between each insulated conductor and all the other conductors and armour wires, which shall be earthed.

b) For unarmoured cable the voltage shall be applied between conductors.

c) For single core cable, it shall be immersed in water at room temperature for one hour and test voltage then be applied between the conductor and water. The test voltage shall be increased gradually and maintained at full value (3000 volts) for 5 minutes.

15 **MARKING AND PACKING**

15.1 The word "WAPDA" shall be super scribed on every meter length of all the cables in the form of protruding mould.

15.2 The two core cable shall be supplied in coils of 100 meters length wrapped in Hessian/Cotton cloth/Polyethylene. of the following characteristics

Hessian:

Thickness	0.8mm
Shearing Strength	1.00 to 1.04 kg/mm ^{2}

Cotton Cloth :

Thickness	0.40mm
Shearing Strength	2.2 to 2.6 kg/mm ^{2}

Polyethylene

Thickness	0.15mm
Shearing Strength	0.35 to 0.55 kg/mm ^{2}

The wrapping should be overlapped.

15.3 For two core cable a tolerance of +5% in standard length of L.T. PVC cables is allowed for only 10% coils of the entire order.

15.4 For 5% of the 2 core cable length on order, 100 meters length i e one cod may be supplied in two workable random lengths neither of which shall be shorter than 40 meters. Such coil shall be clearly marked with the length two pieces on wrapper, and the payment would be made for length actually supplied.

15.5 The single core and four core cables shall be whirled around the wooden drums. The length of the cable shall be as given in Table - IV

TABLE-IV

Sr. No.	CABLE	Length of cable on Drum
Single core cable		
i)	25,70 & 120mm^2	1000 meters.
ii)	185 & 300 mm^2	500 meters.
Four core unarmoured cable		
i)	10 mm	250 meters
ii)	25, 70 & 120 mm ^{2}	200 meters.
iii)	185 & 300 mm^2	150 meters.
Four core armoured		
i)	10 mm	250 meters.
ii)	25, 70 & 120 mm ^{2}	200 meters
iii)	185 & 300 mm^2	100 meters.

15.6 The dimension of the wooden drum will be as per drawing No. CEDE/DDST/18. The reels shall be made from high-quality KIKER WOOD and shall be of sound construction, able to withstand the usual rigors of transportation and field construction. The complete periphery of the reels apart from being protected by heavy wooden lagging nailed at each end of the reel flanges as per Fig. CEDE/DDST/18 shall also be bound by two steel straps. The wooden reel shall be given two brush coats of 100% creosote before winding of cable.

15.7 The manufacturer shall provide the following markings on the reels/pickings in legible and indelible letters:

i. Manufacturer's name and designation.
ii. Cable designation.
iii. Address of the consignee and purchase order No
iv. Sr. No. of the reel/packing

15.8 The manufacturers shall stamp the following information on metallic plates which shall be securely nailed to the reel. In case of packing the following information shall be printed on card stapled securely to the packing

i. Size and designation of the cable.
ii. Net weight, tare weight and gross weight in Kg.
iii. Total length of the cable on the reel/packing in meters
iv. Sr. No. of the reel/packing.

16.9 Both sides of the reel shall have an arrow mark indicating the direct MI of rolling.

16.10 All markings shall appear on both sides of the reel in the positions indicated in Fig. CEDD/DDST/18.

16.11 n case of packing the following information shall be printed on sticker paper pasted on steel sheet of size 9x6 cm tagged with the packing "

i) Manufacturer's name and designation.
ii) Cable designation.
iii) Address of consignee with P.O. No.
iv) Total length of Cable.
v) Serial Number of the Coil

16. ENCLOSURES

Note:- Above comprehensive technical specification has been derived and in consistent with CHIEF ENGINEER (LES!CSI & STANDARDS) Specification No. DDS-8 (2007) SID Cables

SPECIAL PROVISIONS AND SPECIFICATIONS-TECHNICAL PROVISIONS
FOR
Asset Performance Management System (APMS)
SPECIAL CONDITIONS

1. Supplier shall provide a programme in a bar-chart/CPM/PERT form showing the sequence of work items by which he proposes to complete the work of the entire Contract.
2. The supplier provides the details regarding mobilization in Pakistan, the type of facilities including personnel accommodation, office accommodation, provision for maintenance and for storage, communications, security and other services to be used.
3. Insurance of Goods and other materials from Store to Site shall include all insurance costs covering the responsibility of all losses or damages, while loading, unloading, storing, trimming on the carrier and transporting to Site. Checking and verifying of consignments, issuance of receiving reports and damage reports (when applicable) shall be the Bidder's responsibility.

DRAWINGS

(FOR THE APMS)

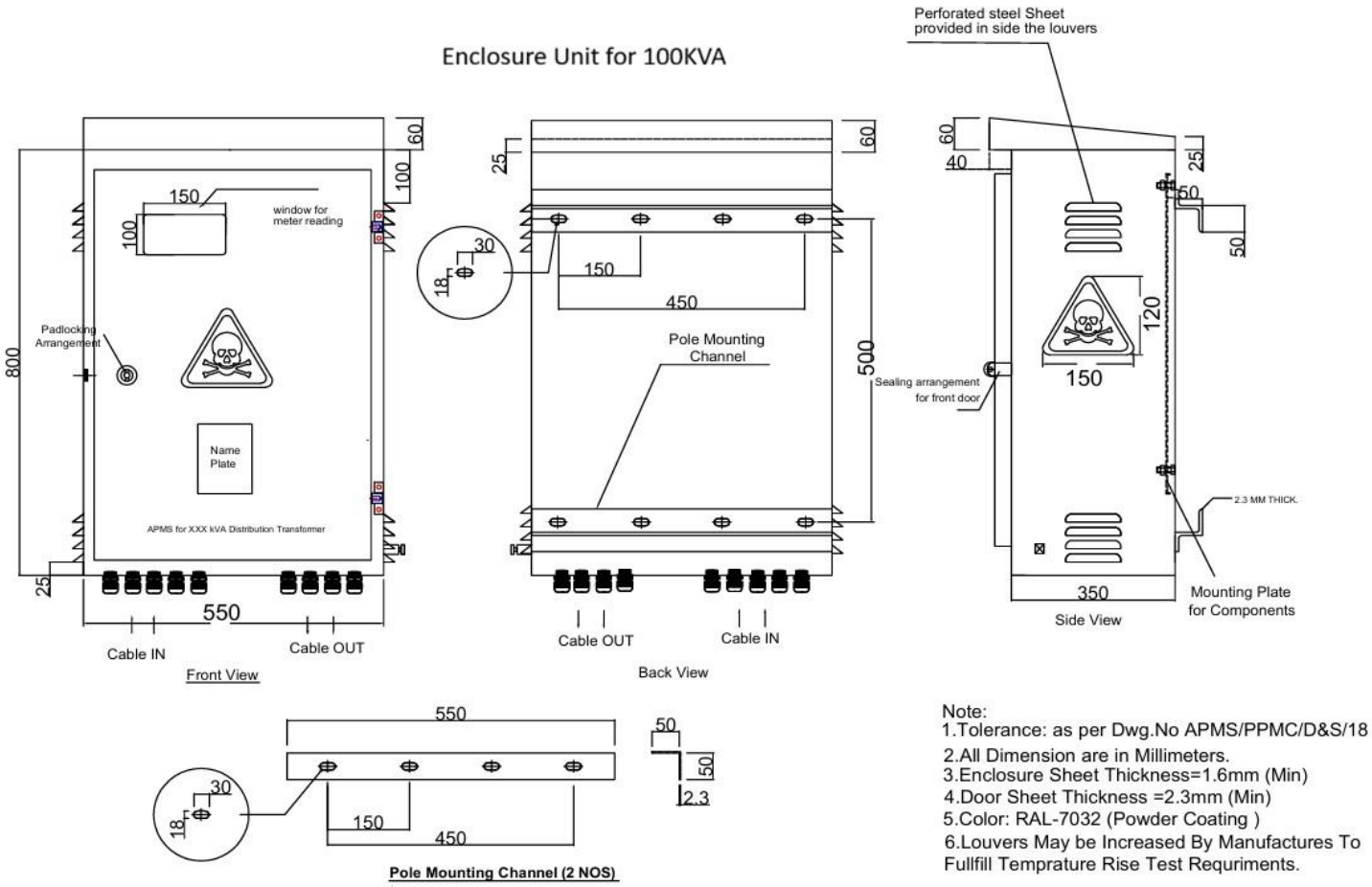

Note:
1.Tolerance: as per Dwg.No APMS/PPMC/D&S/18
2.All Dimension are in Millimeters.
3.Enclosure Sheet Thickness=1.6mm (Min)
4.Door Sheet Thickness =2.3mm (Min)
5.Color: RAL-7032 (Powder Coating)
6.Louvers May be Increased By Manufactures To Fullfill Temprature Rise Test Requriments.

Enclosure Unit for 200 KVA

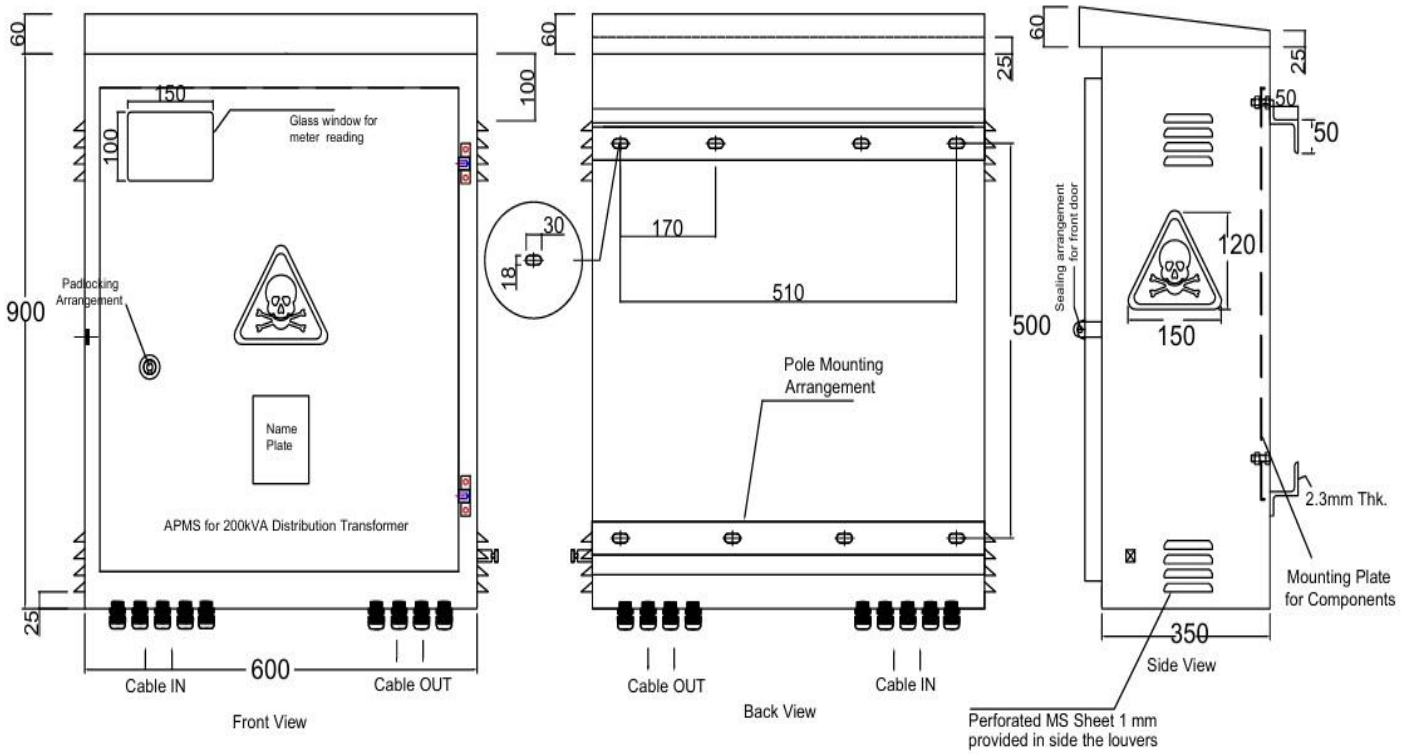

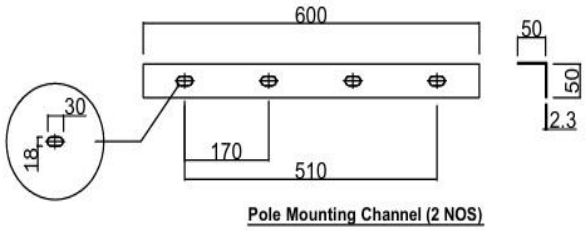

Pole Mounting Channel (2 NOS)

Note:
1.Tolerance: as per Dwg.No APMS/PPMC/D&S/18
2.All Dimension are in Millimeters.
3.Enclosure Sheet Thickness=1.6mm (Min)
4.Door Sheet Thickness =2.3mm (Min)
5.Color: RAL-7032 (Powder Coating)
6.Louvers May be Increased By Manufactures To Fullfill Temprature Rise Test Requriments.

Internal Components Arrangements

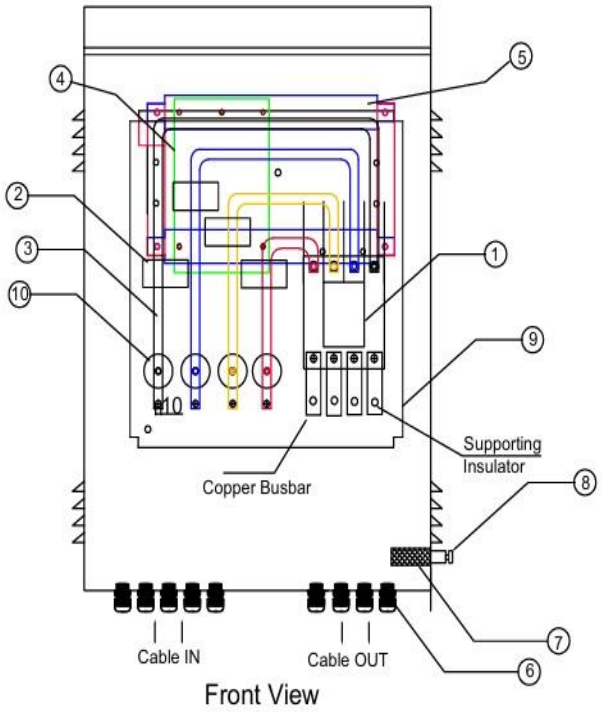

Front View

LEGEND

1- MCCB
2- LT CTs
3- Copper Bus Bars
4- Smart Metering and Control Device
5- Channel for Meter Support
6- Cable Glands
7- Copper braided wire for door earthing
8- Earthing Terminal
9- Mounting Plate for Components
10- Busbar Support Insulators

Note:
1.Tolerance: as per Dwg.No APMS/PPMC/D&S/18
2. Detailed dimension and Holes Position shall be as per approved Prototype

Base Plate for 100 KVA

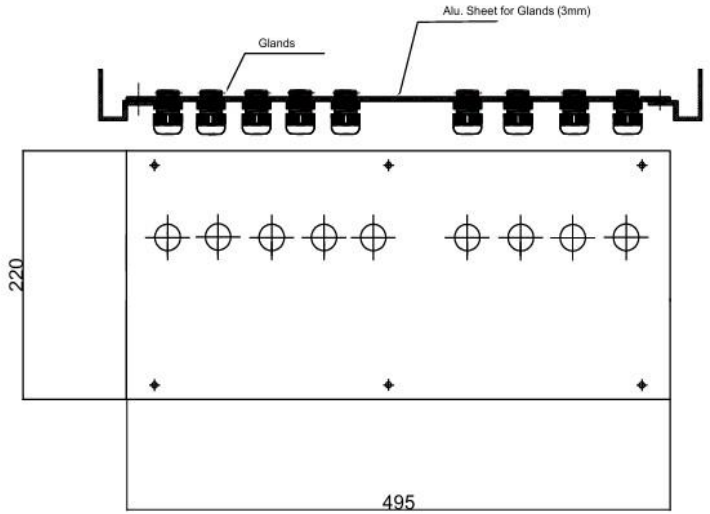

Note:
1.Tolerance: as per Dwg.No APMS/PPMC/D&S/18
2.All Dimension are in Millimeters.
3.Gland Material = PVC
4. Holes Positions Can Be Changed But Will Be Fixed Once Prototype is Approved.

Base Plate For 200 KVA

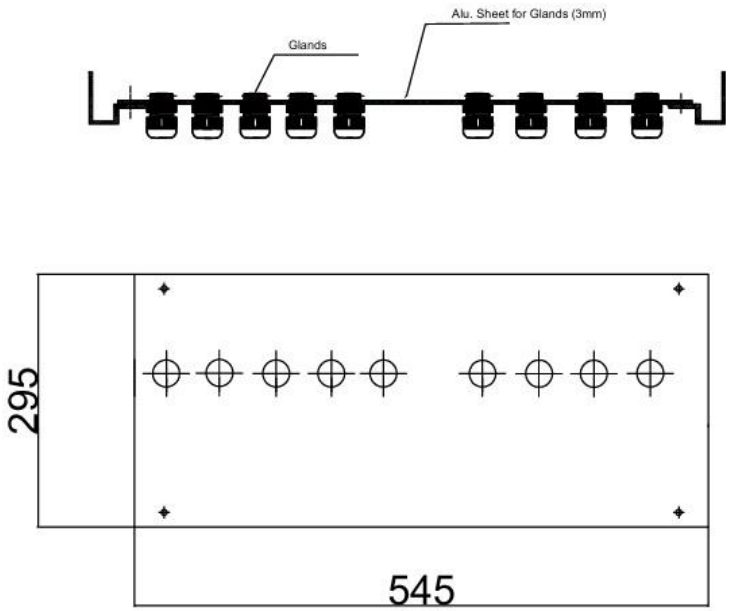

Note:
1.Tolerance: as per Dwg.No APMS/PPMC/D&S/18
2.All Dimension are in Millimeters.
3.Gland Material = PVC
4. Holes Position Can Be Changed But Will Be Fixed Once Prototype is Approved.

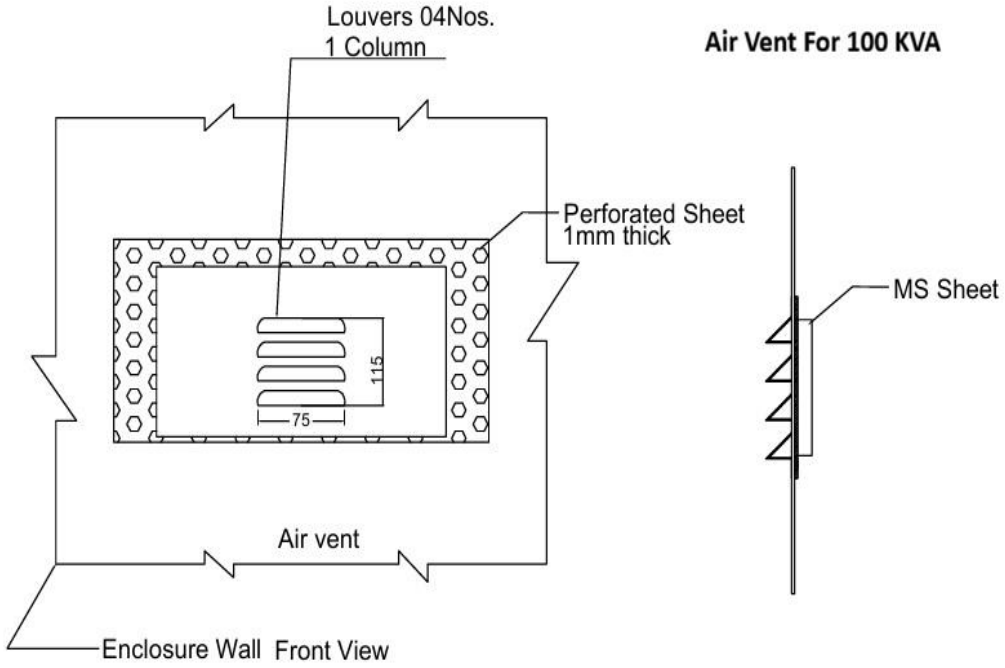

Note:
1.Tolerance: as per Dwg.No APMS/PPMC/D&S/18
2.All Dimension are in Millimeters.
3.Number of Louvers may be increased to comply with temperature rise test. However, it shall be fixed during prototype approval

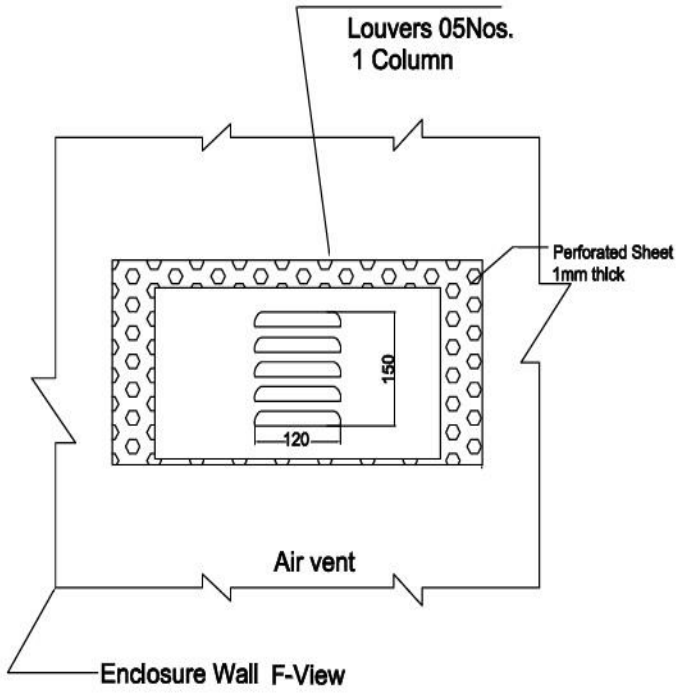

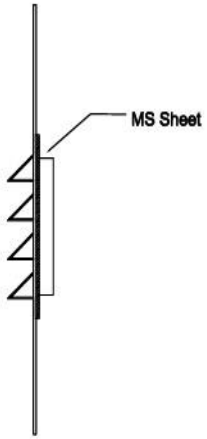

Note:
1.Tolerance: as per Dwg.No APMS/PPMC/D&S/18
2.All Dimension are in Millimeters.
3.Number of Louvers may be increased to comply with temperature rise test. However, it shall be fixed during prototype approval

Meter Support Channel

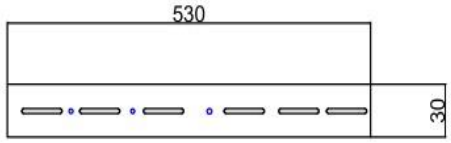

Channel for Meter Support.

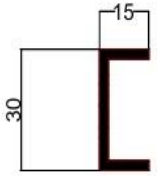

Sectional View

Note:
1.Tolerance: as per Dwg.No APMS/PPMC/D&S/18
2.All Dimension are in Millimeters.
3. Holes shall be made as per Requirement

Rating Plate

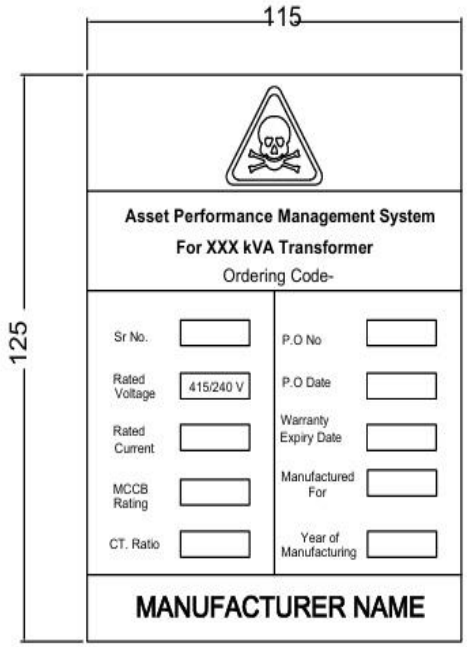

Note:

Following Information Will Be In-Corporated In The Name Plate if There is Any Additional Requirement By The Customer (height maybe increased to 135 mm if needed :

1. Magnetic contactor Rating (A)
2. Manufacturer of OTL (for OTL ordering codes only)
3. Low Oil level and Normal Recovery Point (for OTL ordering codes only)

Note:

1.Tolerance: as per Dwg.No APMS/PPMC/D&S/18
2.All Dimension are in Millimeters.
3.Material: Non Magnetic SS-316 Sheet/ Aluminium Powder Coated Plate
4.Thickness 0.5mm

Earthing Terminal

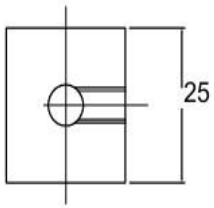

Material: MS Galvanized

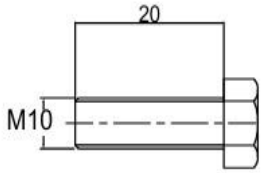

Material: MS
Finish: Galvanized

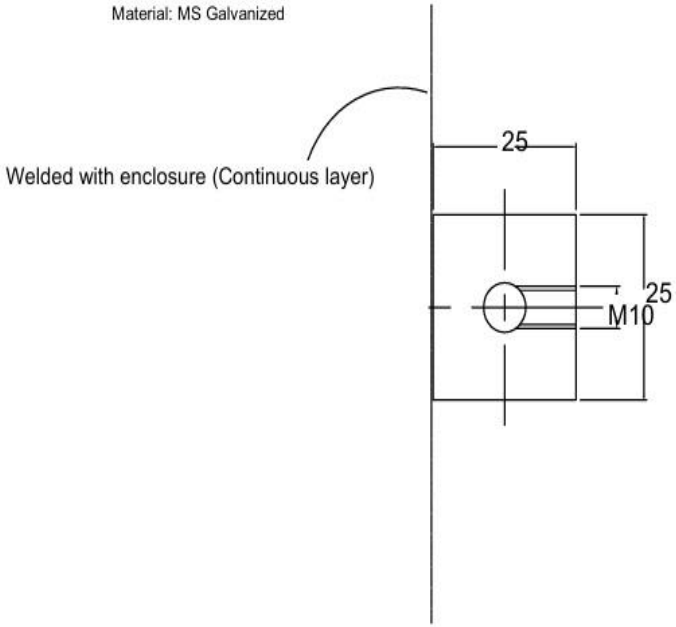

Note:
1.Tolerance: as per Dwg.No APMS/PPMC/D&S/18
2.All Dimension are in Millimeters.

Current Transformer

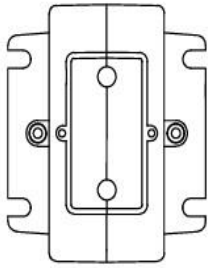

Top View

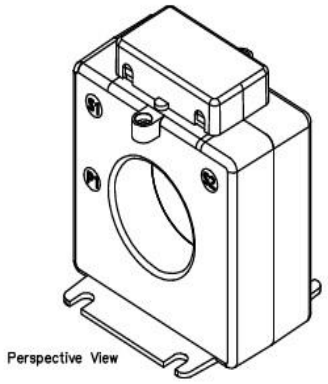

Perspective View

Terminal Markings

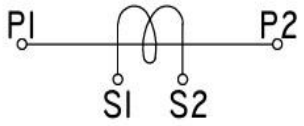

NOTE:

1. TERMINAL MARKINGS
   a. Primary P1,P2
   b. Secondary S1,S2
2. Dimensions shall be fixed according to the approved Prototype

INSULATOR

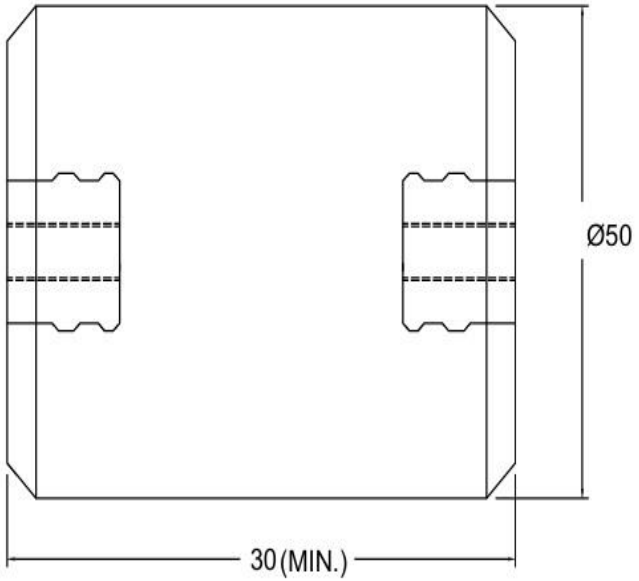

Material: Bakelite/Polymer

Note:
1.Tolerance: as per Dwg.No APMS/PPMC/D&S/18
2.All Dimension are in Millimeters.
3.Spacers maybe used by manufacture for Adjustment Purpose

CIRCUIT DIAGRAM WITH MAGNETIC CONTACTOR

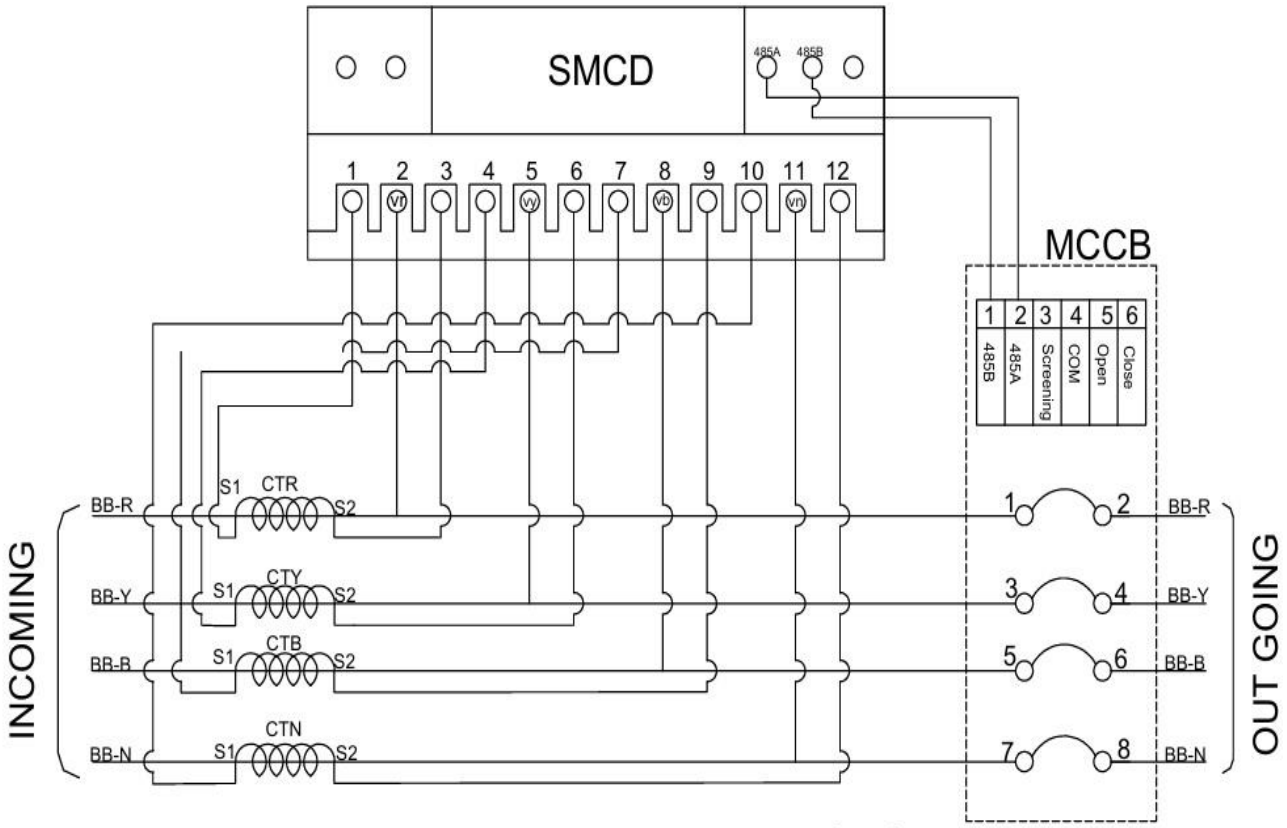

Note:

Terminals are shown for Visualization purpose Only

Legends

01	BB-R	Busbar For Red Phase
02	BB-Y	Busbar For Yellow Phase
03	BB-B	Busbar For Blue Phase
04	BB-N	Busbar For Neutral(Black)
05	MCCB	Molded Case Circuit Breaker

01	CTR	CT For Red Phase
02	CTY	CT For Yellow Phase
03	CTB	CT For Blue Phase
04	CTN	CT For Neutral(Black)
05	SMCD	Smart Metering and Controlling Device

CIRCUIT DIAGRAM WITH MAGNETIC CONTACTOR

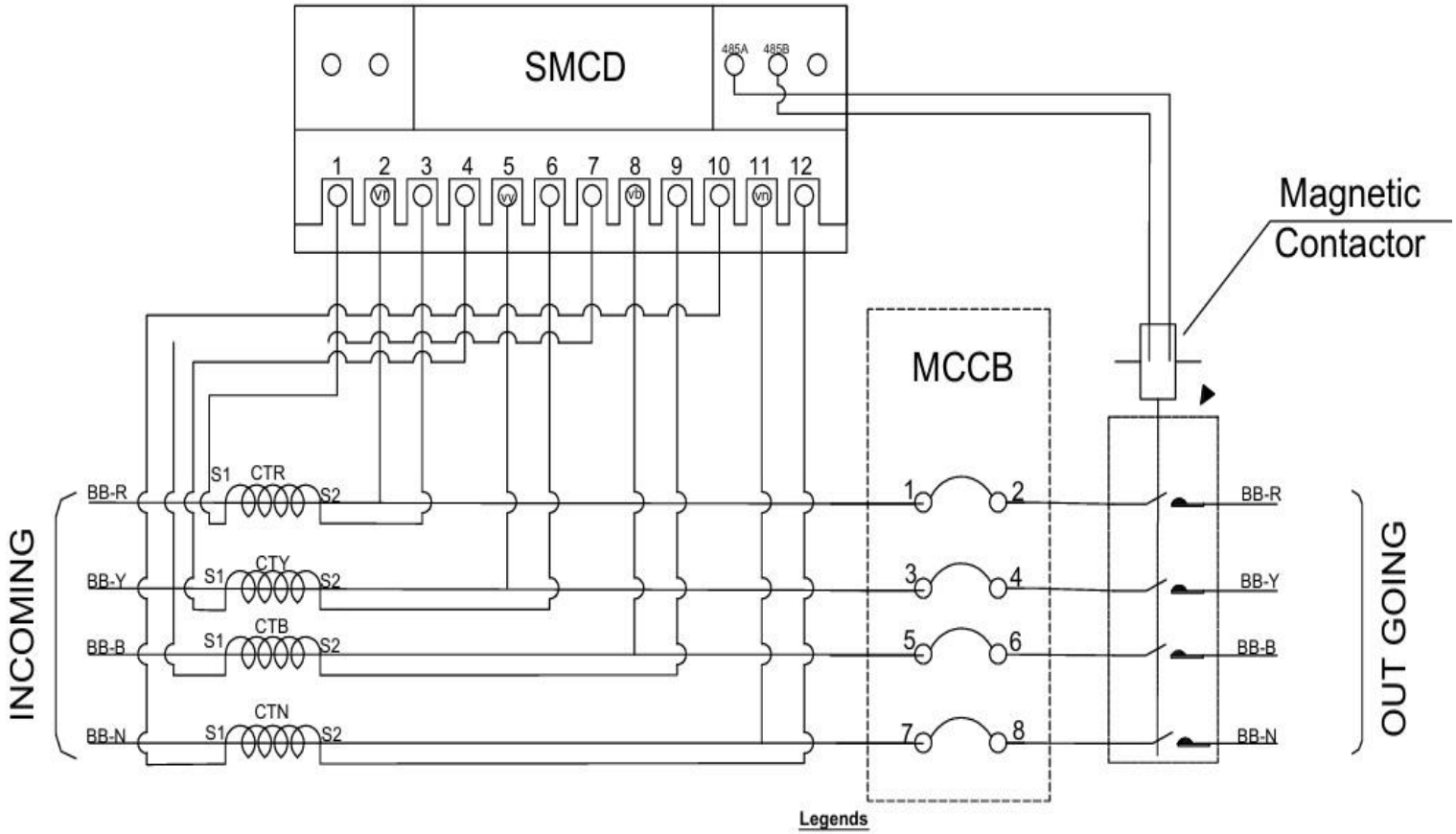

Legends

01	BB-R	Busbar For Red Phase
02	BB-Y	Busbar For Yellow Phase
03	BB-B	Busbar For Blue Phase
04	BB-N	Busbar For Neutral(Black)
05	MCCB	Molded Case Circuit Breaker

01	CTR	CT For Red Phase
02	CTY	CT For Yellow Phase
03	CTB	CT For Blue Phase
04	CTN	CT For Neutral(Black)
05	SMCD	Smart Metering and Controlling Device

Note:

Terminals are shown for Visualization purpose Only

MAGNETIC CONTACTOR ARRANGMENT

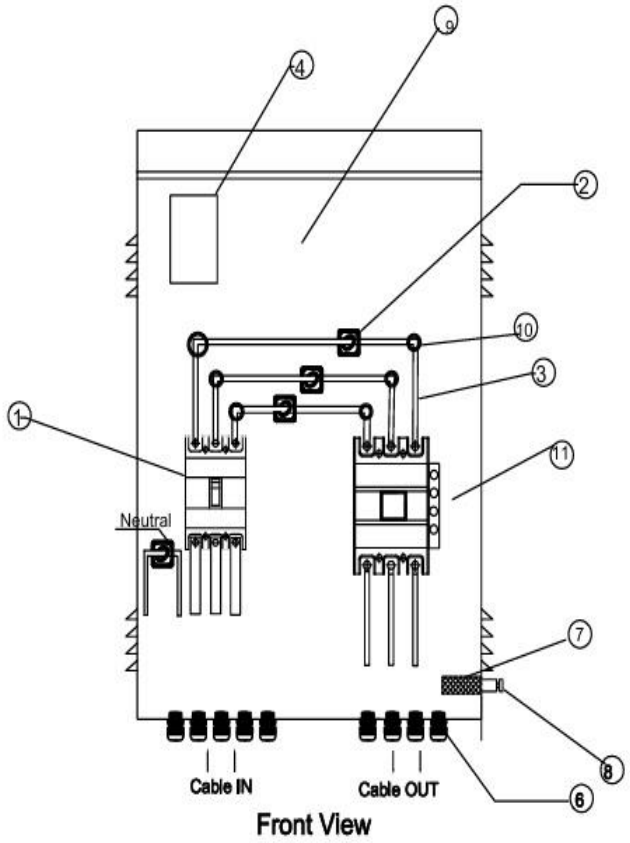

Front View

LEGEND

1- MCCB
2- LT CTs
3- Copper Bus Bars
4- Smart Metering and Control Device
5- Channel for Meter Support
6- Cable Glands
7- Copper braided wire for door earthing
8- Earthing Terminal
9- Mounting Plate for Components
10- Busbar Support Insulators
11-Magenetic Contractor

Note:
1.Tolerance: as per Dwg.No APMS/PPMC/D&S/18

4. Detailed dimension and Holes Position shall be as per approved Prototype

Tolerance Sheet

Tolerance in Dimensions

DIMENSION RANGE	TOLERANCE
1.0mm To 10mm	±10.0%
11mm To 55mm	±5.0%
56mm To 75mm	±3.0%
76mm & Above	±2.0%

SPECIAL PROVISIONS

SP-1 SCOPE OF SUPPLY

The scope includes Procurement of Asset Performance Management System (APMS) *(Ordering Code:* **APMS-MC-S)** for 100KVA and 200KVA Rating Distribution Transformers along with allied material required for installation.

SP-2 ENGINEERING DATA

A. Submission and Approval

(1) The furnishing of engineering data by the Supplier shall be in accordance with the Schedule as specified in the Bidding Document. The review of these data by the Purchaser will cover only general conformance of the data to the specifications and not a thorough review of all dimensions, quantities and details of the materials, or items indicated or the accuracy of the information submitted. This review by the Purchaser shall not be considered by the Supplier, as limiting any of his responsibilities and liabilities for mistakes and deviations from the requirements, specified under these specifications.

(2) All engineering data submitted by the Supplier after review by the Purchaser shall form part of the contract document.

(3) In no case the approval by the Purchaser of any document does imply compliance with technical requirements nor the absence of errors in such documents.

(4) If errors are discovered any time during the validity of the contract, then the Supplier shall be responsible for consequences.

SP-3 DRAWINGS

The Bidders/Supplier are required to submit drawings of its offered equipment during different stages of the tender/contract. Following are various categories of the drawings referred in this document:

A. Type/Categories of Drawings

i. Specification Drawings

The specification drawings are the drawings indicating general/tentative requirements of the goods/equipment for the bidders to prepare their bids. Specification drawings for this tender are provided in Volume-II of the Bidding Documents.

ii. Bid Drawings

The bid drawings are the drawings prepared by the Bidder for bidding purposes, and shall be part of his Bid.

iii. Drawings for Approval

These drawings are the drawings submitted by the Supplier for the purpose of acquiring approval of the Purchaser prior to start manufacturing of goods.

iv. Approved Drawings

These are the drawings approved by the Purchaser and the manufacturing of goods/equipment shall be carried out in accordance with the Approved drawings & data. The specification drawings and Supplier's bid drawings shall not be used for manufacturing of Goods unless specific instructions for such use are given by the Purchaser.

v. As-Built Drawings

The Supplier shall submit as-built drawings/data to the Purchaser as detailed in clause 3(C) below, which shall incorporate all changes made in the equipment during contract execution.

B. Drawings/data for Approval & Approved Drawings

i. General:

The Supplier shall submit detailed drawings/Specific Works Data for approval by the Purchaser in accordance with provisions of Contract and the additional requirements specified in the respective Clauses hereof. The drawings/data shall be complete in all respects, shall have been reviewed and checked by the Supplier and shall be submitted in due time and in logical order to facilitate proper coordination.

If any errors, omissions or discrepancies are found in the figures, specifications and/or drawings or, if any feature shall appear to the supplier to be indefinite or unclear, the same shall be referred to the Purchaser whose written explanation and/or clarification shall be obtained before proceeding with the work.

The Supplier shall allow **one (01) month** for the Engineer's approval of drawings in his schedule of work and in the time allowed for completion of the contract. Extra time required for approval of drawings due to deficiencies in design or errors in submitted drawings shall be the responsibility of the supplier and no extension in time will be allowed on this account.

The sequence of submission of all drawings shall be such that all information is available for checking each drawing when it is received.

All drawings and documents furnished by the Supplier in accordance with the Contract shall become the property of the Purchaser.

All approved drawings/data shall form part of the Contract. If revisions are required after a drawing/data has been approved, the Supplier shall furnish for approval additional copies specified for the initial submission, prior to such revision(s).

Approval by the Purchaser does not relieve the Supplier of his responsibility to do the work in accordance with the Contract.

The Supplier shall be responsible for any discrepancies, errors or omissions in any drawings or other particulars supplied by him whether such drawings or particulars have been approved by the Purchaser or not.

ii. Format for submission of drawings/data for approval:

All drawings shall be in English language and all dimensions shall be in Metric System. Symbols shall be in accordance with IEC standards. All drawings shall be clearly marked **"**Hyderabad Electric Supply Company (HESCO)**.** All drawings/data submitted for approval shall conform to ISO paper sizes A0 or A4.

All drawings submitted for approval shall be provided with a blank white space, approximately 90 mm in height by 120 mm in width, near the lower right-hand corner to be used for notations by the Engineer.

Drawings for approval, shall be distributed through international couriers to addresses and in number as specified above.

iii. Drawings & Specific Plant Data to be submitted for Purchaser's Approval:

The Supplier shall submit the following drawings and Specific Plant Data in hard copy as well as soft copy (in PDF) within fifteen (**15**) days after issuance of Notification of Award for approval of the Engineer, together with overall and handling weights and dimensions of the Goods to be provided under the Contract.

Manufacturer's design Engineer shall visit office of Purchaser during review & approval of specific plant data/technical data & drawings and it shall be arranged by the Supplier.

Name of Goods	***Technical Specifications and Standards***
Asset Performance Management System (APMS) for *(Ordering Code:* **APMS-MC-S**) 200KVA and 100KVA Rating Distribution Transformers along with allied material required for installation	As per above mentioned Technical Specification of APMS.
Cable Single Core 300 mm2	As per above mentioned Technical Specification of Cables.
Cable Single Core 120 mm^2	

Detailed drawings and Specific Goods Data sheets for APMS, Cable Single Core 300 mm2 & Cable Single Core 120 mm^2

(i) Specific Plant Data sheets.

(ii) Complete set of all type test/prototype test reports (even if carried out in earlier contract)

(iii) Test Program indicating arrangement & details of all tests to be carried out and their tentative schedule.

(iv) Packing details.

(v) Any other information and drawing which may be required by the Purchaser or the Supplier understand that it will be deemed necessary for smooth execution of project.

Drawings, Specific Plant Data sheets, packing details/drawings, test program indicating details of all tests to be carried out, their tentative schedule, type test reports and any other information which may be required by the Purchaser or the information which Supplier understand that it will be deemed necessary for smooth execution of project.

Process of Approval of Drawings/Data

(1) All changes/corrections will be made on the relevant submitted drawings/data and will be marked "APPROVED", "APPROVED EXCEPT AS NOTED" or "RETURNED FOR CORRECTION" by the Purchaser. One print will be returned to the Supplier. The other shall be retained by the Purchaser for his own use and shall serve as the Master Copy and shall prevail in case of any doubt or discrepancy subsequently arising.

(2) If the drawing/data is returned to the Supplier stamped "APPROVED" he may immediately proceed with manufacturing of Goods. Any drawing/data marked "APPROVED" by the Purchaser shall be known as an "Approved Drawing".

(3) If the drawing/data is returned to the Supplier stamped "APPROVED EXCEPT AS NOTED" he may proceed with the manufacturing of Goods taking into account the corrections and comments noted on the drawing/data. The Supplier shall revise the drawings/data as required and resubmit them in the same routine as before for record purposes.

(4) If the drawing/data is returned to the Supplier stamped "RETURNED FOR CORRECTION" he shall not proceed with the manufacturing of Goods but shall make the changes and corrections or prepare new drawings/data and resubmit the revised drawing/data to the Purchaser for approval at no change in price or Delivery & Completion Schedule. Resubmitted prints and calculations will be subject to the same routine as stated before. Time required for such revisions and re-submittals of drawings/data or calculations will not entitle the Supplier to any extension in Contractual Completion time.

(5) If the Supplier does not agree with exceptions taken by the Purchaser, the Supplier shall state in his letter of re-submittal his reasons for not complying with the Purchaser's exceptions. Revision number and date and description of change shall be shown on all drawings or calculations revised.

(6) Methods of packing, marking and shipping shall be submitted to the Purchaser for review and acceptance. Before any shipment is made, the Supplier shall get the packing detailed drawings approved by the Purchaser.

iv. Manufacturing Prior to Engineer's approval of Drawings/data

Any manufacturing/fabrication of Goods done prior to the approval of drawings & data shall be at the Supplier's risk. The Purchaser shall have the right to reject the said Goods if not conforming to required specifications and drawings or to request additional details and to require the Supplier to make any change(s) which are necessary to conform to the provisions and intent of these Specifications and such changes shall be made without additional cost to Purchaser. The approval of the drawings & data by the Purchaser shall not be construed as a complete check but will indicate only that the detailing is satisfactory. Approval by the Purchaser of the Supplier's drawings & data shall not be held to relieve the Supplier of his obligations to meet all the requirements of these Specifications or the responsibility for the correctness of the Supplier's drawings & data or for correct fit and use of assembled Goods furnished by the Supplier.

C. As-Built Data, Drawings & Documents

The Supplier shall submit as built drawings, specific woks data and documents on DVD/Pen Drive, as detailed below, within five (05) days after issuance of Inspection Certificate (IC) to Purchaser

D. Distribution of Drawings and Documents

The drawings and documents shall be submitted to the Purchaser within the time given in the Contract or within such reasonable time as the Purchaser may require, and in the number as specified hereunder:

Documents	Engineer	Purchaser/ Project Director
Drawings for approval	3	1
Approved Drawings	2	1
Schedules, specifications and other documents/data	2	1
Record (As-Built) Drawings and Data	2	4

Reproducible transparency	1	1
Record (As-Built) Drawings in pdf format	1	1
Codes and standards	1	1
Manufacturing progress information	2	2
Insurance Certificates	1	2
Receiving reports	1	2
Damage reports	1	2
Correspondence with Purchaser	1	1
Correspondence with Head office of Purchaser.	1	1

SP-4 STANDARDS AND TYPICAL DESIGN

4.1 Applicable Standards and Codes

(1) All Goods and design shall be generally in accordance with latest revision of the standards specified in the Technical Provisions except where specifically directed otherwise. If these Specifications conflict with any or all the standards stated in the Technical Provisions, these Specifications shall have precedence and shall govern.

(1) In case deviation from the above standards is minor, approval of the Purchaser may be given to use other national standards prevalent in the country of manufacture. No departure from the standards specified will be considered after the Contract has been awarded unless specific authorization is requested in writing from the Purchaser.

SP-5 PORT OF ENTRY AND DISEMBARKATION

The Supplier would have the option to use either Karachi Port or Port Muhammad Bin Qasim or both or any other seaport in Pakistan as the port(s) of entry and disembarkation, at his own risk and costs. For the purpose of clarification, the term "Wharf at the Port of Karachi" wherever used throughout this document shall mean:

(a) Wharf at the Port of Karachi, and/or
(b) Wharf at the Port of Muhammad Bin Qasim

SP-6 PACKING AND MARKING

As discussed above

SP-7 TRANSPORTATION OF GOODS

7.1 General

The Supplier outside from the Purchaser's country shall transport the Goods from its place of manufacture or origin to the Purchaser's port and insurance thereof from its place of manufacturer up to **Regional Store MCPL Work Shop Jamshoro & Regional Store Nawabshah, HESCO Hyderabad-Pakistan** and shall be solely responsible for selection of routes and carriers, and expediting in order that all shipments are safely and expeditiously transported and arrived at Karachi Sea Port.

SP-8 SHOP INSPECTION AND ORDERS FOR GOODS

8.1 Inspection

Unless otherwise authorized by the Purchaser no Goods shall be shipped from its point of original manufacture or final shop assembly before it has been inspected and approved by the Purchaser.

8.2 Goods Orders

The Supplier shall, if requested, provide the Purchaser with unpriced/priced copies of the Supplier's purchase orders for Goods or approved sub-Contracted supply at the time any such orders are placed. The Supplier shall also provide the Purchaser with any other relevant information requested to ensure proper expediting and scheduling of the deliveries.

8.3 Acceptance of Materials

The approval by the Purchaser of any Goods prior to shipment shall in no way relieve the Supplier of any of his responsibilities for meeting all of the requirements of the Specifications and shall not prevent subsequent rejection if such Goods are later found to be defective or not conforming to the Specifications.

SP-9 SCHEDULE AND MEETINGS

9.1 Schedule

(1) The Supplier shall manufacture & supply the Goods in accordance with the dates/periods specified in Delivery & Completion Schedule given herein above. The Supplier shall regularly review the Schedule and notify the Purchaser promptly of any revisions which in his view may be required from time to time.

(2) Each group of Goods shall be completely delivered. The Supplier shall keep the Purchaser informed of the progress of the Contract and notify the Purchaser approximately eight (08) weeks in advance, in writing, as to when the Goods will be ready for inspection and for shipping and shall supply lists covering each

consignment in sufficient detail to enable the Purchaser to check the contents of the packages.

(3) In preparing the Delivery and Completion Schedule, the Supplier shall fully take into account the requirements (and possibilities) for ocean (or air) freight. Progress of all shipments shall be continuously monitored and the Supplier shall provide staff or agents to expedite all shipments to ensure compliance with the approved Delivery Schedule.

9.2 **Meetings**

(1) Soon after the date of Award of Contract, the Purchaser may, require a meeting with the Supplier at HESCO Head Quarter at Hyderabad / WAPDA House, Lahore or at a place or mode, mutually agreed upon to discuss scheduling of drawings & data, manufacture, testing & inspection, scheduled sequences of delivery and other similar problems which may be pertinent to the completion of the Project.
(2) From time to time during the execution of the Contract, the Purchaser may call meetings as deemed necessary for the purpose of progress monitoring and proper execution of the Contract.
(3) As required by the Purchaser, responsible representatives of the Supplier shall attend such meetings.
(4) All expenses incurred by the Supplier for attending such meetings shall be borne by the Supplier and shall not be reimbursable.

SP-10 ADDITIONAL TEST(S)

The purchaser reserves the right for carrying out any other tests of a reasonable nature at the works of the supplier/laboratory or at any other recognized laboratory/research institute in addition to the type, acceptance and routine tests as mentioned in the specifications attached here to, at the cost of the purchaser to satisfy that the material complies with the intent of this specification.

SP-11 LANGUAGE

All correspondence, literature, drawings, name plates, diagrams, applicable data, equipment details, instructions and maintenance books and manuals, spare parts, books and descriptive data shall be in the English language.

SP-13 COMMUNICATIONS WITH THE PURCHASER

Address for all communications for the approval of drawings and other submittals etc., as follows:

THE PURCHASER:

Chief Engineer (Dev) PMU HESCO Hyderabad
B# A-1 HESCO Colony Hussainabad Hyderabad.

Tel: +92-22-9260070 Fax: +92-22-9260525

SP-14 PROTOTYPE APPROVAL

A. ASSET PERFORMANCE MANAGEMENT SYSTEM
Referred to the technical specification clause 13.0 .

B. CABLE SINGLE CORE
Referred to technical specification clause 14.0 and the latest NTDC Type Test Policy. Equipment/material not covered under the latest NTDC Type Test Policy shall be type tested in accordance with the relevant NTDC Specifications

The type testing, in case of award, will be arranged as per Technical Specification for APMS / National Transmission and Dispatch Company Pakistan's latest Type Test Policy or the relevant NTDC Specification For Cables attached herewith in accordance with the provisions of the bidding document without affecting the stipulated delivery schedule.

The Supplier shall require that all goods and materials to be incorporated in the goods be new, unused, and of the most recent or current models, and that they incorporate all recent improvements in design and materials.

4. Drawings

Technical data/ Drawings as per Technical Specification for AMPS and for cables.
The successful bidder will provide 3 sets of data/ drawings for approval from HESCO/ Consultant. In case if data / drawing is already approved by NTDC / HESCO, the same will be applicable for subjected tender."

5. Inspections and Tests

Inspections and Tests

- The inspections and tests will be performed as per technical specification for APMS and technical specification for Cables.

Successful Bidder will provide affidavit regarding provision of UDIL Compliance certificate from PITC Lahore PITC within 07 days from the date of issuance of prototype approval complete in all respect. As per the prevailing practice PITC issues the UDIL certificate within 30 days from the date of submission of the request. Any delay from the issuance of certificate from the PITC will not be attributed on bidders/suppliers' part provided the bidder request for UDIL certification is complete in all respect.

- After installation, communication test will be carried out at site and concerned Executive Engineer (Op) and Manager MIS/AMI, HESCO will issue acceptance certificate in this regard.
- Within Country: Pre-shipment Inspection at manufacturer's work will be carried out by HESCO or its designated representatives nominated by Chief Engineer (Dev) HESCO.
- Outside Country: Pre-shipment Inspection at manufacturer's work will be carried out by HESCO or its designated representatives by Chief Executive Officer HESCO

PART 3 – Contract

Section VIII - General Conditions of Contract

Table of Clauses

1. Definitions 159

2. Contract Documents 160

3. Fraud and Corruption 160

4. Interpretation 160

5. Language 161

6. Joint Venture, Consortium or Association 161

7. Eligibility 162

8. Notices 162

9. Governing Law 162

10. Settlement of Disputes 162

11. Inspections and Audit by the Bank 163

12. Scope of Supply 163

13. Delivery and Documents 163

14. Supplier's Responsibilities 164

15. Contract Price 165

16. Terms of Payment 165

17. Taxes and Duties 166

18. Performance Security 166

19. Copyright 166

20. Confidential Information 167

21. Subcontracting 168

22. Specifications and Standards 168

23. Packing and Documents 168

24. Insurance 169

25. Transportation and Incidental Services 169

26. Inspections and Tests 170

27. Liquidated Damages 171

28. Warranty 171

29. Patent Indemnity 172

30. Limitation of Liability 173

31. Change in Laws and Regulations 173

32. Force Majeure 174

33. Change Orders and Contract Amendments 174

34. Extensions of Time 175

35. Termination 176

36. Assignment 177

37. Export Restriction 177

Section VIII. General Conditions of Contract

1. Definitions

1.1 The following words and expressions shall have the meanings hereby assigned to them:

(a) "Bank" means the World Bank and refers to the International Bank for Reconstruction and Development (IBRD) or the International Development Association (IDA).

(b) "Contract" means the Contract Agreement entered into between the Purchaser and the Supplier, together with the Contract Documents referred to therein, including all attachments, appendices, and all documents incorporated by reference therein.

(c) "Contract Documents" means the documents listed in the Contract Agreement, including any amendments thereto.

(d) "Contract Price" means the price payable to the Supplier as specified in the Contract Agreement, subject to such additions and adjustments thereto or deductions therefrom, as may be made pursuant to the Contract.

(e) "Day" means calendar day.

(f) "Completion" means the fulfillment of the Related Services by the Supplier in accordance with the terms and conditions set forth in the Contract.

(g) "GCC" means the General Conditions of Contract.

(h) "Goods" means all of the commodities, raw material, machinery and equipment, and/or other materials that the Supplier is required to supply to the Purchaser under the Contract.

(i) "Purchaser's Country" is the country specified **in the Special Conditions of Contract** (SCC).

(j) "Purchaser" means the entity purchasing the Goods and Related Services, as **specified in the SCC.**

(k) "Related Services" means the services incidental to the supply of the goods, such as insurance, installation, training and initial maintenance and other such obligations of the Supplier under the Contract.

(l) "SCC" means the Special Conditions of Contract.

(m) "Subcontractor" means any person, private or government entity, or a combination of the above, to whom any part of

the Goods to be supplied or execution of any part of the Related Services is subcontracted by the Supplier.

(n) "Supplier" means the person, private or government entity, or a combination of the above, whose Bid to perform the Contract has been accepted by the Purchaser and is named as such in the Contract Agreement.

(o) "The Project Site," where applicable, means the place **named in the SCC.**

2. Contract Documents

2.1 Subject to the order of precedence set forth in the Contract Agreement, all documents forming the Contract (and all parts thereof) are intended to be correlative, complementary, and mutually explanatory. The Contract Agreement shall be read as a whole.

3. Fraud and Corruption

3.1 The Bank requires compliance with the Bank's Anti-Corruption Guidelines and its prevailing sanctions policies and procedures as set forth in the WBG's Sanctions Framework, as set forth in Appendix 1 to the GCC.

3.2 The Purchaser requires the Supplier to disclose any commissions or fees that may have been paid or are to be paid to agents or any other party with respect to the Bidding process or execution of the Contract. The information disclosed must include at least the name and address of the agent or other party, the amount and currency, and the purpose of the commission, gratuity or fee.

4. Interpretation

4.1 If the context so requires it, singular means plural and vice versa.

4.2 Incoterms

(a) Unless inconsistent with any provision of the Contract**,** the meaning of any trade term and the rights and obligations of parties thereunder shall be as prescribed by Incoterms **specified in the SCC**.

(b) The terms EXW, CIP, FCA, CFR and other similar terms, when used, shall be governed by the rules prescribed in the current edition of Incoterms **specified in the SCC** and published by the International Chamber of Commerce in Paris, France.

4.3 Entire Agreement

The Contract constitutes the entire agreement between the Purchaser and the Supplier and supersedes all communications, negotiations and agreements (whether written or oral) of the parties with respect thereto made prior to the date of Contract.

4.4 Amendment

No amendment or other variation of the Contract shall be valid unless it is in writing, is dated, expressly refers to the Contract, and is signed by a duly authorized representative of each party thereto.

4.5 Nonwaiver

(a) Subject to GCC Sub-Clause 4.5(b) below, no relaxation, forbearance, delay, or indulgence by either party in enforcing any of the terms and conditions of the Contract or the granting of time by either party to the other shall prejudice, affect, or restrict the rights of that party under the Contract, neither shall any waiver by either party of any breach of Contract operate as waiver of any subsequent or continuing breach of Contract.

(b) Any waiver of a party's rights, powers, or remedies under the Contract must be in writing, dated, and signed by an authorized representative of the party granting such waiver, and must specify the right and the extent to which it is being waived.

4.6 Severability

If any provision or condition of the Contract is prohibited or rendered invalid or unenforceable, such prohibition, invalidity or unenforceability shall not affect the validity or enforceability of any other provisions and conditions of the Contract.

5. Language

5.1 The Contract as well as all correspondence and documents relating to the Contract exchanged by the Supplier and the Purchaser, shall be written in the language specified in the **SCC.** Supporting documents and printed literature that are part of the Contract may be in another language provided they are accompanied by an accurate translation of the relevant passages in the language specified**,** in which case, for purposes of interpretation of the Contract, this translation shall govern.

5.2 The Supplier shall bear all costs of translation to the governing language and all risks of the accuracy of such translation, for documents provided by the Supplier.

6. Joint Venture, Consortium or Association

6.1 If the Supplier is a joint venture, consortium, or association, all of the parties shall be jointly and severally liable to the Purchaser for the fulfillment of the provisions of the Contract and shall designate one party to act as a leader with authority to bind the joint venture, consortium, or association. The composition or the constitution of the joint venture, consortium, or association shall not be altered without the prior consent of the Purchaser.

7. Eligibility

7.1 The Supplier and its Subcontractors shall have the nationality of an eligible country. A Supplier or Subcontractor shall be deemed to have the nationality of a country if it is a citizen or constituted, incorporated, or registered, and operates in conformity with the provisions of the laws of that country.

7.2 All Goods and Related Services to be supplied under the Contract and financed by the Bank shall have their origin in Eligible Countries. For the purpose of this Clause, origin means the country where the goods have been grown, mined, cultivated, produced, manufactured, or processed; or through manufacture, processing, or assembly, another commercially recognized article results that differs substantially in its basic characteristics from its components.

8. Notices

8.1 Any notice given by one party to the other pursuant to the Contract shall be in writing to the address **specified in the SCC.** The term "in writing" means communicated in written form with proof of receipt.

8.2 A notice shall be effective when delivered or on the notice's effective date, whichever is later.

9. Governing Law

9.1 The Contract shall be governed by and interpreted in accordance with the laws of the Purchaser's Country, unless otherwise **specified in the SCC.**

9.2 Throughout the execution of the Contract, the Supplier shall comply with the import of goods and services prohibitions in the Purchaser's Country when:

(a) as a matter of law or official regulations, the Borrower's country prohibits commercial relations with that country; or

(b) by an act of compliance with a decision of the United Nations Security Council taken under Chapter VII of the Charter of the United Nations, the Borrower's Country prohibits any import of goods from that country or any payments to any country, person, or entity in that country.

10. Settlement of Disputes

10.1 The Purchaser and the Supplier shall make every effort to resolve amicably by direct informal negotiation any disagreement or dispute arising between them under or in connection with the Contract.

10.2 If, after twenty-eight (28) days, the parties have failed to resolve their dispute or difference by such mutual consultation, then either the Purchaser or the Supplier may give notice to the other party of its intention to commence arbitration, as hereinafter

provided, as to the matter in dispute, and no arbitration in respect of this matter may be commenced unless such notice is given. Any dispute or difference in respect of which a notice of intention to commence arbitration has been given in accordance with this Clause shall be finally settled by arbitration. Arbitration may be commenced prior to or after delivery of the Goods under the Contract. Arbitration proceedings shall be conducted in accordance with the rules of procedure **specified in the SCC.**

10.3 Notwithstanding any reference to arbitration herein,

(a) the parties shall continue to perform their respective obligations under the Contract unless they otherwise agree; and

(b) the Purchaser shall pay the Supplier any monies due the Supplier.

11. Inspections and Audit by the Bank

11.1 The Supplier shall keep, and shall make all reasonable efforts to cause its Subcontractors and subconsultants to keep, accurate and systematic accounts and records in respect of the Goods in such form and details as will clearly identify relevant time changes and costs.

11.2 Pursuant to paragraph 2.2 e. of Appendix 1 to the General Conditions the Supplier shall permit and shall cause its agents (where declared or not), subcontractors, subconsultants, service providers, suppliers, and personnel, to permit, the Bank and/or persons appointed by the Bank to inspect the site and/or the accounts, records and other documents relating to the procurement process, selection and/or contract execution, and to have such accounts, records and other documents audited by auditors appointed by the Bank. The Supplier's and its Subcontractors' and subconsultants' attention is drawn to Sub-Clause 3.1 (Fraud and Corruption) which provides, inter alia, that acts intended to materially impede the exercise of the Bank's inspection and audit rights constitute a prohibited practice subject to contract termination (as well as to a determination of ineligibility pursuant to the Bank's prevailing sanctions procedures).

12. Scope of Supply

12.1 The Goods and Related Services to be supplied shall be as specified in the Schedule of Requirements.

13. Delivery and Documents

13.1 Subject to GCC Sub-Clause 33.1, the Delivery of the Goods and Completion of the Related Services shall be in accordance with the Delivery and Completion Schedule specified in the Schedule of

Requirements. The details of shipping and other documents to be furnished by the Supplier are **specified in the SCC.**

14. Supplier's Responsibilities

14.1 The Supplier shall supply all the Goods and Related Services included in the Scope of Supply in accordance with GCC Clause 12, and the Delivery and Completion Schedule, as per GCC Clause 13.

14.2 The Supplier, including its Subcontractors, shall not employ or engage forced labor or persons subject to trafficking, as described in GCC Sub-Clauses 14.3 and 14.4.

14.3 Forced labor consists of any work or service, not voluntarily performed, that is exacted from an individual under threat of force or penalty, and includes any kind of involuntary or compulsory labor, such as indentured labor, bonded labor or similar labor-contracting arrangements.

14.4 Trafficking in persons is defined as the recruitment, transportation, transfer, harboring or receipt of persons by means of the threat or use of force or other forms of coercion, abduction, fraud, deception, abuse of power, or of a position of vulnerability, or of the giving or receiving of payments or benefits to achieve the consent of a person having control over another person, for the purposes of exploitation.

14.5 The Supplier, including its Subcontractors, shall not employ or engage a child under the age of 14 unless the national law specifies a higher age (the minimum age).

14.6 The Supplier, including its Subcontractors, shall not employ or engage a child between the minimum age and the age of 18 in a manner that is likely to be hazardous, or to interfere with, the child's education, or to be harmful to the child's health or physical, mental, spiritual, moral, or social development.

14.7 Work considered hazardous for children is work that, by its nature or the circumstances in which it is carried out, is likely to jeopardize the health, safety, or morals of children. Such work activities prohibited for children include work:

(a) with exposure to physical, psychological or sexual abuse;

(b) underground, underwater, working at heights or in confined spaces;

(c) with dangerous machinery, equipment or tools, or involving handling or transport of heavy loads;

(d) in unhealthy environments exposing children to hazardous substances, agents, or processes, or to temperatures, noise or vibration damaging to health; or

(e) under difficult conditions such as work for long hours, during the night or in confinement on the premises of the employer.

14.8 The Supplier shall comply, and shall require its Subcontractors if any to comply, with all applicable health and safety regulations, laws, guidelines, and any other requirement stated in the Technical Specifications.

14.9 **Pursuant to the SCC**, the Supplier, including its Subcontractors/ suppliers/ manufacturers shall take all technical and organizational measures necessary to protect the information technology systems and data used in connection with the Contract. Without limiting the foregoing, the Supplier, including its Subcontractors/ suppliers/ manufacturers, shall use all reasonable efforts to establish, maintain, implement and comply with, reasonable information technology, information security, cyber security and data protection controls, policies and procedures, including oversight, access controls, encryption, technological and physical safeguards and business continuity/disaster recovery and security plans that are designed to protect against and prevent breach, destruction, loss, unauthorized distribution, use, access, disablement, misappropriation or modification, or other compromise or misuse of or relating to any information technology system or data used in connection with the Contract.

14.10 The Supplier shall comply with additional obligations as **specified in the SCC.**

15. Contract Price

15.1 Prices charged by the Supplier for the Goods supplied and the Related Services performed under the Contract shall not vary from the prices quoted by the Supplier in its Bid, with the exception of any price adjustments **authorized in the SCC.**

16. Terms of Payment

16.1 The Contract Price, including any Advance Payments, if applicable, shall be paid as **specified in the SCC.**

16.2 The Supplier's request for payment shall be made to the Purchaser in writing, accompanied by invoices describing, as appropriate, the Goods delivered and Related Services performed, and by the documents submitted pursuant to GCC Clause 13 and upon fulfillment of all other obligations stipulated in the Contract.

16.3 Payments shall be made promptly by the Purchaser, but in no case later than sixty (60) days after submission of an invoice or request for payment by the Supplier, and after the Purchaser has accepted it.

16.4 The currencies in which payments shall be made to the Supplier under this Contract shall be those in which the Bid price is expressed.

16.5 In the event that the Purchaser fails to pay the Supplier any payment by its due date or within the period **set forth in the SCC,** the Purchaser shall pay to the Supplier interest on the amount of such delayed payment at the rate **shown in the SCC,** for the period of delay until payment has been made in full, whether before or after judgment or arbitrage award.

17. Taxes and Duties

17.1 For goods manufactured outside the Purchaser's Country, the Supplier shall be entirely responsible for all taxes, stamp duties, license fees, and other such levies imposed outside the Purchaser's Country.

17.2 For goods Manufactured within the Purchaser's Country, the Supplier shall be entirely responsible for all taxes, duties, license fees, etc., incurred until delivery of the contracted Goods to the Purchaser.

17.3 If any tax exemptions, reductions, allowances or privileges may be available to the Supplier in the Purchaser's Country, the Purchaser shall use its best efforts to enable the Supplier to benefit from any such tax savings to the maximum allowable extent.

18. Performance Security

18.1 If required as specified in the SCC, the Supplier shall, within twenty-eight (28) days of the notification of contract award, provide a performance security for the performance of the Contract in the amount **specified in the SCC.**

18.2 The proceeds of the Performance Security shall be payable to the Purchaser as compensation for any loss resulting from the Supplier's failure to complete its obligations under the Contract.

18.3 As specified in the SCC, the Performance Security, if required, shall be denominated in the currency (ies) of the Contract, or in a freely convertible currency acceptable to the Purchaser; and shall be in one of the format stipulated by the **Purchaser in the SCC,** or in another format acceptable to the Purchaser.

18.4 The Performance Security shall be discharged by the Purchaser and returned to the Supplier not later than twenty-eight (28) days following the date of Completion of the Supplier's performance obligations under the Contract, including any warranty obligations, unless **specified otherwise in the SCC.**

19. Copyright

19.1 The copyright in all drawings, documents, and other materials containing data and information furnished to the Purchaser by the Supplier herein shall remain vested in the Supplier, or, if

they are furnished to the Purchaser directly or through the Supplier by any third party, including suppliers of materials, the copyright in such materials shall remain vested in such third party.

20. Confidential Information

20.1 The Purchaser and the Supplier shall keep confidential and shall not, without the written consent of the other party hereto, divulge to any third party any documents, data, or other information furnished directly or indirectly by the other party hereto in connection with the Contract, whether such information has been furnished prior to, during or following completion or termination of the Contract. Notwithstanding the above, the Supplier may furnish to its Subcontractor such documents, data, and other information it receives from the Purchaser to the extent required for the Subcontractor to perform its work under the Contract, in which event the Supplier shall obtain from such Subcontractor an undertaking of confidentiality similar to that imposed on the Supplier under GCC Clause 20.

20.2 The Purchaser shall not use such documents, data, and other information received from the Supplier for any purposes unrelated to the contract. Similarly, the Supplier shall not use such documents, data, and other information received from the Purchaser for any purpose other than the performance of the Contract.

20.3 The obligation of a party under GCC Sub-Clauses 20.1 and 20.2 above, however, shall not apply to information that:

(a) the Purchaser or Supplier need to share with the Bank or other institutions participating in the financing of the Contract;

(b) now or hereafter enters the public domain through no fault of that party;

(c) can be proven to have been possessed by that party at the time of disclosure and which was not previously obtained, directly or indirectly, from the other party; or

(d) otherwise lawfully becomes available to that party from a third party that has no obligation of confidentiality.

20.4 The above provisions of GCC Clause 20 shall not in any way modify any undertaking of confidentiality given by either of the parties hereto prior to the date of the Contract in respect of the Supply or any part thereof.

20.5 The provisions of GCC Clause 20 shall survive completion or termination, for whatever reason, of the Contract.

21. Subcontracting

21.1 The Supplier shall notify the Purchaser in writing of all subcontracts awarded under the Contract if not already specified in the Bid. Notification by the Supplier, for addition of any Subcontractor not named in the Contract, shall also include the Subcontractor's declaration in accordance with Appendix 2 to the GCC- Sexual exploitation and Abuse (SEA) and/or Sexual Harassment (SH) Performance Declaration. Such notification, in the original Bid or later shall not relieve the Supplier from any of its obligations, duties, responsibilities, or liability under the Contract.

21.2 Subcontracts shall comply with the provisions of GCC Clauses 3 and 7.

22. Specifications and Standards

22.1 Technical Specifications and Drawings

(a) The Goods and Related Services supplied under this Contract shall conform to the technical specifications and standards mentioned in Section VI, Schedule of Requirements and, when no applicable standard is mentioned, the standard shall be equivalent or superior to the official standards whose application is appropriate to the Goods' country of origin.

(b) The Supplier shall be entitled to disclaim responsibility for any design, data, drawing, specification or other document, or any modification thereof provided or designed by or on behalf of the Purchaser, by giving a notice of such disclaimer to the Purchaser.

(c) Wherever references are made in the Contract to codes and standards in accordance with which it shall be executed, the edition or the revised version of such codes and standards shall be those specified in the Schedule of Requirements. During Contract execution, any changes in any such codes and standards shall be applied only after approval by the Purchaser and shall be treated in accordance with GCC Clause 33.

23. Packing and Documents

23.1 The Supplier shall provide such packing of the Goods as is required to prevent their damage or deterioration during transit to their final destination, as indicated in the Contract. During transit, the packing shall be sufficient to withstand, without limitation, rough handling and exposure to extreme temperatures, salt and precipitation, and open storage. Packing case size and weights shall take into consideration, where

appropriate, the remoteness of the goods' final destination and the absence of heavy handling facilities at all points in transit.

23.2 The packing, marking, and documentation within and outside the packages shall comply strictly with such special requirements as shall be expressly provided for in the Contract, including additional requirements, if any, **specified in the SCC,** and in any other instructions ordered by the Purchaser.

24. Insurance

24.1 Unless otherwise **specified in the SCC,** the Goods supplied under the Contract shall be fully insured—in a freely convertible currency from an eligible country—against loss or damage incidental to manufacture or acquisition, transportation, storage, and delivery, in accordance with the applicable Incoterms or in the manner specified in the **SCC.**

25. Transportation and Incidental Services

25.1 Unless otherwise **specified in the SCC,** responsibility for arranging transportation of the Goods shall be in accordance with the specified Incoterms.

25.2 The Supplier may be required to provide any or all of the following services, including additional services, if any, **specified in SCC:**

(a) performance or supervision of on-site assembly and/or start-up of the supplied Goods;

(b) furnishing of tools required for assembly and/or maintenance of the supplied Goods;

(c) furnishing of a detailed operations and maintenance manual for each appropriate unit of the supplied Goods;

(d) performance or supervision or maintenance and/or repair of the supplied Goods, for a period of time agreed by the parties, provided that this service shall not relieve the Supplier of any warranty obligations under this Contract; and

(e) training of the Purchaser's personnel, at the Supplier's plant and/or on-site, in assembly, start-up, operation, maintenance, and/or repair of the supplied Goods.

25.3 Prices charged by the Supplier for incidental services, if not included in the Contract Price for the Goods, shall be agreed upon in advance by the parties and shall not exceed the prevailing rates charged to other parties by the Supplier for similar services

26. Inspections and Tests

26.1 The Supplier shall at its own expense and at no cost to the Purchaser carry out all such tests and/or inspections of the Goods and Related Services as are **specified in the SCC.**

26.2 The inspections and tests may be conducted on the premises of the Supplier or its Subcontractor, at point of delivery, and/or at the Goods' final destination, or in another place in the Purchaser's Country as **specified in the SCC.** Subject to GCC Sub-Clause 26.3, if conducted on the premises of the Supplier or its Subcontractor, all reasonable facilities and assistance, including access to drawings and production data, shall be furnished to the inspectors at no charge to the Purchaser.

26.3 The Purchaser or its designated representative shall be entitled to attend the tests and/or inspections referred to in GCC Sub-Clause 26.2, provided that the Purchaser bear all of its own costs and expenses incurred in connection with such attendance including, but not limited to, all traveling and board and lodging expenses.

26.4 Whenever the Supplier is ready to carry out any such test and inspection, it shall give a reasonable advance notice, including the place and time, to the Purchaser. The Supplier shall obtain from any relevant third party or manufacturer any necessary permission or consent to enable the Purchaser or its designated representative to attend the test and/or inspection.

26.5 The Purchaser may require the Supplier to carry out any test and/or inspection not required by the Contract but deemed necessary to verify that the characteristics and performance of the Goods comply with the technical specifications codes and standards under the Contract, provided that the Supplier's reasonable costs and expenses incurred in the carrying out of such test and/or inspection shall be added to the Contract Price. Further, if such test and/or inspection impedes the progress of manufacturing and/or the Supplier's performance of its other obligations under the Contract, due allowance will be made in respect of the Delivery Dates and Completion Dates and the other obligations so affected.

26.6 The Supplier shall provide the Purchaser with a report of the results of any such test and/or inspection.

26.7 The Purchaser may reject any Goods or any part thereof that fail to pass any test and/or inspection or do not conform to the specifications. The Supplier shall either rectify or replace such rejected Goods or parts thereof or make alterations necessary to meet the specifications at no cost to the Purchaser, and shall

repeat the test and/or inspection, at no cost to the Purchaser, upon giving a notice pursuant to GCC Sub-Clause 26.4.

26.8 The Supplier agrees that neither the execution of a test and/or inspection of the Goods or any part thereof, nor the attendance by the Purchaser or its representative, nor the issue of any report pursuant to GCC Sub-Clause 26.6, shall release the Supplier from any warranties or other obligations under the Contract.

27. Liquidated Damages

27.1 Except as provided under GCC Clause 32, if the Supplier fails to deliver any or all of the Goods by the Date(s) of delivery or perform the Related Services within the period specified in the Contract, the Purchaser may without prejudice to all its other remedies under the Contract, deduct from the Contract Price, as liquidated damages, a sum equivalent to the percentage **specified in the SCC** of the delivered price of the delayed Goods or unperformed Services for each week or part thereof of delay until actual delivery or performance, up to a maximum deduction of the percentage **specified in those SCC.** Once the maximum is reached, the Purchaser may terminate the Contract pursuant to GCC Clause 35.

28. Warranty

28.1 The Supplier warrants that all the Goods are new, unused, and of the most recent or current models, and that they incorporate all recent improvements in design and materials, unless provided otherwise in the Contract.

28.2 Subject to GCC Sub-Clause 22.1(b), the Supplier further warrants that the Goods shall be free from defects arising from any act or omission of the Supplier or arising from design, materials, and workmanship, under normal use in the conditions prevailing in the country of final destination.

28.3 Unless otherwise **specified in the SCC,** the warranty shall remain valid for twelve (12) months after the Goods, or any portion thereof as the case may be, have been delivered to and accepted at the final destination **indicated in the SCC,** or for eighteen (18) months after the date of shipment from the port or place of loading in the country of origin, whichever period concludes earlier.

28.4 The Purchaser shall give notice to the Supplier stating the nature of any such defects together with all available evidence thereof, promptly following the discovery thereof. The Purchaser shall afford all reasonable opportunity for the Supplier to inspect such defects.

28.5 Upon receipt of such notice, the Supplier shall, within the period **specified in the SCC,** expeditiously repair or replace the defective Goods or parts thereof, at no cost to the Purchaser.

28.6 If having been notified, the Supplier fails to remedy the defect within the period **specified in the SCC,** the Purchaser may proceed to take within a reasonable period such remedial action as may be necessary, at the Supplier's risk and expense and without prejudice to any other rights which the Purchaser may have against the Supplier under the Contract.

29. Patent Indemnity

29.1 The Supplier shall, subject to the Purchaser's compliance with GCC Sub-Clause 29.2, indemnify and hold harmless the Purchaser and its employees and officers from and against any and all suits, actions or administrative proceedings, claims, demands, losses, damages, costs, and expenses of any nature, including attorney's fees and expenses, which the Purchaser may suffer as a result of any infringement or alleged infringement of any patent, utility model, registered design, trademark, copyright, or other intellectual property right registered or otherwise existing at the date of the Contract by reason of:

(a) the installation of the Goods by the Supplier or the use of the Goods in the country where the Site is located; and

(b) the sale in any country of the products produced by the Goods.

Such indemnity shall not cover any use of the Goods or any part thereof other than for the purpose indicated by or to be reasonably inferred from the Contract, neither any infringement resulting from the use of the Goods or any part thereof, or any products produced thereby in association or combination with any other equipment, plant, or materials not supplied by the Supplier, pursuant to the Contract.

29.2 If any proceedings are brought or any claim is made against the Purchaser arising out of the matters referred to in GCC Sub-Clause 29.1, the Purchaser shall promptly give the Supplier a notice thereof, and the Supplier may at its own expense and in the Purchaser's name conduct such proceedings or claim and any negotiations for the settlement of any such proceedings or claim.

29.3 If the Supplier fails to notify the Purchaser within twenty-eight (28) days after receipt of such notice that it intends to conduct any such proceedings or claim, then the Purchaser shall be free to conduct the same on its own behalf.

29.4 The Purchaser shall, at the Supplier's request, afford all available assistance to the Supplier in conducting such proceedings or claim, and shall be reimbursed by the Supplier for all reasonable expenses incurred in so doing.

29.5 The Purchaser shall indemnify and hold harmless the Supplier and its employees, officers, and Subcontractors from and against any and all suits, actions or administrative proceedings, claims, demands, losses, damages, costs, and expenses of any nature, including attorney's fees and expenses, which the Supplier may suffer as a result of any infringement or alleged infringement of any patent, utility model, registered design, trademark, copyright, or other intellectual property right registered or otherwise existing at the date of the Contract arising out of or in connection with any design, data, drawing, specification, or other documents or materials provided or designed by or on behalf of the Purchaser.

30. Limitation of Liability

30.1 Except in cases of criminal negligence or willful misconduct,

(a) the Supplier shall not be liable to the Purchaser, whether in contract, tort, or otherwise, for any indirect or consequential loss or damage, loss of use, loss of production, or loss of profits or interest costs, provided that this exclusion shall not apply to any obligation of the Supplier to pay liquidated damages to the Purchaser and

(b) the aggregate liability of the Supplier to the Purchaser, whether under the Contract, in tort or otherwise, shall not exceed the total Contract Price, provided that this limitation shall not apply to the cost of repairing or replacing defective equipment, or to any obligation of the supplier to indemnify the Purchaser with respect to patent infringement

31. Change in Laws and Regulations

31.1 Unless otherwise specified in the Contract, if after the date of 28 days prior to date of Bid submission, any law, regulation, ordinance, order or bylaw having the force of law is enacted, promulgated, abrogated, or changed in the place of the Purchaser's Country where the Site is located (which shall be deemed to include any change in interpretation or application by the competent authorities) that subsequently affects the Delivery Date and/or the Contract Price, then such Delivery Date and/or Contract Price shall be correspondingly increased or decreased, to the extent that the Supplier has thereby been affected in the performance of any of its obligations under the Contract. Notwithstanding the foregoing, such additional or reduced cost shall not be separately paid or credited if the same has already

been accounted for in the price adjustment provisions where applicable, in accordance with GCC Clause 15.

32. Force Majeure

32.1 The Supplier shall not be liable for forfeiture of its Performance Security, liquidated damages, or termination for default if and to the extent that it's delay in performance or other failure to perform its obligations under the Contract is the result of an event of Force Majeure.

32.2 For purposes of this Clause, "Force Majeure" means an event or situation beyond the control of the Supplier that is not foreseeable, is unavoidable, and its origin is not due to negligence or lack of care on the part of the Supplier. Such events may include, but not be limited to, acts of the Purchaser in its sovereign capacity, wars or revolutions, fires, floods, epidemics, quarantine restrictions, and freight embargoes.

32.3 If a Force Majeure situation arises, the Supplier shall promptly notify the Purchaser in writing of such condition and the cause thereof. Unless otherwise directed by the Purchaser in writing, the Supplier shall continue to perform its obligations under the Contract as far as is reasonably practical, and shall seek all reasonable alternative means for performance not prevented by the Force Majeure event.

33. Change Orders and Contract Amendments

33.1 The Purchaser may at any time order the Supplier through notice in accordance GCC Clause 8, to make changes within the general scope of the Contract in any one or more of the following:

(a) drawings, designs, or specifications, where Goods to be furnished under the Contract are to be specifically manufactured for the Purchaser;

(b) the method of shipment or packing;

(c) the place of delivery; and

(d) the Related Services to be provided by the Supplier.

33.2 If any such change causes an increase or decrease in the cost of, or the time required for, the Supplier's performance of any provisions under the Contract, an equitable adjustment shall be made in the Contract Price or in the Delivery/Completion Schedule, or both, and the Contract shall accordingly be amended. Any claims by the Supplier for adjustment under this Clause must be asserted within twenty-eight (28) days from the date of the Supplier's receipt of the Purchaser's change order.

33.3 Prices to be charged by the Supplier for any Related Services that might be needed but which were not included in the Contract shall be agreed upon in advance by the parties and shall not

exceed the prevailing rates charged to other parties by the Supplier for similar services.

33.4 **Value Engineering:** The Supplier may prepare, at its own cost, a value engineering proposal at any time during the performance of the contract. The value engineering proposal shall, at a minimum, include the following;

(a) the proposed change(s), and a description of the difference to the existing contract requirements;

(b) a full cost/benefit analysis of the proposed change(s) including a description and estimate of costs (including life cycle costs) the Purchaser may incur in implementing the value engineering proposal; and

(c) a description of any effect(s) of the change on performance/functionality.

The Purchaser may accept the value engineering proposal if the proposal demonstrates benefits that:

(a) accelerates the delivery period; or

(b) reduces the Contract Price or the life cycle costs to the Purchaser; or

(c) improves the quality, efficiency or sustainability of the Goods; or

(d) yields any other benefits to the Purchaser,

without compromising the necessary functions of the Facilities.

If the value engineering proposal is approved by the Purchaser and results in:

(a) a reduction of the Contract Price; the amount to be paid to the Supplier shall be the percentage specified **in the PCC** of the reduction in the Contract Price; or

(b) an increase in the Contract Price; but results in a reduction in life cycle costs due to any benefit described in (a) to (d) above, the amount to be paid to the Supplier shall be the full increase in the Contract Price.

33.5 Subject to the above, no variation in or modification of the terms of the Contract shall be made except by written amendment signed by the parties.

34. Extensions of Time

34.1 If at any time during performance of the Contract, the Supplier or its subcontractors should encounter conditions impeding timely delivery of the Goods or completion of Related Services pursuant to GCC Clause 13, the Supplier shall promptly notify

the Purchaser in writing of the delay, its likely duration, and its cause. As soon as practicable after receipt of the Supplier's notice, the Purchaser shall evaluate the situation and may at its discretion extend the Supplier's time for performance, in which case the extension shall be ratified by the parties by amendment of the Contract.

34.2 Except in case of Force Majeure, as provided under GCC Clause 32, a delay by the Supplier in the performance of its Delivery and Completion obligations shall render the Supplier liable to the imposition of liquidated damages pursuant to GCC Clause 26, unless an extension of time is agreed upon, pursuant to GCC Sub-Clause 34.1.

35. Termination

35.1 Termination for Default

(a) The Purchaser, without prejudice to any other remedy for breach of Contract, by written notice of default sent to the Supplier, may terminate the Contract in whole or in part:

(i) if the Supplier fails to deliver any or all of the Goods within the period specified in the Contract, or within any extension thereof granted by the Purchaser pursuant to GCC Clause 34;

(ii) if the Supplier fails to perform any other obligation under the Contract; or

(iii) if the Supplier, in the judgment of the Purchaser has engaged in Fraud and Corruption, as defined in paragraph 2.2 a of the Appendix 1 to the GCC, in competing for or in executing the Contract.

(b) In the event the Purchaser terminates the Contract in whole or in part, pursuant to GCC Clause 35.1(a), the Purchaser may procure, upon such terms and in such manner as it deems appropriate, Goods or Related Services similar to those undelivered or not performed, and the Supplier shall be liable to the Purchaser for any additional costs for such similar Goods or Related Services. However, the Supplier shall continue performance of the Contract to the extent not terminated.

35.2 Termination for Insolvency.

(a) The Purchaser may at any time terminate the Contract by giving notice to the Supplier if the Supplier becomes bankrupt or otherwise insolvent. In such event, termination will be without compensation to the Supplier, provided that such termination will not prejudice or affect

any right of action or remedy that has accrued or will accrue thereafter to the Purchaser

35.3 Termination for Convenience.

(a) The Purchaser, by notice sent to the Supplier, may terminate the Contract, in whole or in part, at any time for its convenience. The notice of termination shall specify that termination is for the Purchaser's convenience, the extent to which performance of the Supplier under the Contract is terminated, and the date upon which such termination becomes effective.

(b) The Goods that are complete and ready for shipment within twenty-eight (28) days after the Supplier's receipt of notice of termination shall be accepted by the Purchaser at the Contract terms and prices. For the remaining Goods, the Purchaser may elect:

(i) to have any portion completed and delivered at the Contract terms and prices; and/or

(ii) to cancel the remainder and pay to the Supplier an agreed amount for partially completed Goods and Related Services and for materials and parts previously procured by the Supplier.

36. Assignment

36.1 Neither the Purchaser nor the Supplier shall assign, in whole or in part, their obligations under this Contract, except with prior written consent of the other party.

37. Export Restriction

37.1 Notwithstanding any obligation under the Contract to complete all export formalities, any export restrictions attributable to the Purchaser, to the country of the Purchaser, or to the use of the products/goods, systems or services to be supplied, which arise from trade regulations from a country supplying those products/goods, systems or services, and which substantially impede the Supplier from meeting its obligations under the Contract, shall release the Supplier from the obligation to provide deliveries or services, always provided, however, that the Supplier can demonstrate to the satisfaction of the Purchaser and of the Bank that it has completed all formalities in a timely manner, including applying for permits, authorizations and licenses necessary for the export of the products/goods, systems or services under the terms of the Contract. Termination of the Contract on this basis shall be for the Purchaser's convenience pursuant to Sub-Clause 35.3.

APPENDIX 1

(Text in this Appendix shall not be modified)

Fraud and Corruption

1. Purpose

1.1 The Bank's Anti-Corruption Guidelines and this annex apply with respect to procurement under Bank Investment Project Financing operations.

2. Requirements

2.1 The Bank requires that Borrowers (including beneficiaries of Bank financing); bidders (applicants/proposers), consultants, contractors and suppliers; any sub-contractors, sub-consultants, service providers or suppliers; any agents (whether declared or not); and any of their personnel, observe the highest standard of ethics during the procurement process, selection and contract execution of Bank-financed contracts, and refrain from Fraud and Corruption.

2.2 To this end, the Bank:

a. Defines, for the purposes of this provision, the terms set forth below as follows:

i. "corrupt practice" is the offering, giving, receiving, or soliciting, directly or indirectly, of anything of value to influence improperly the actions of another party;

ii. "fraudulent practice" is any act or omission, including misrepresentation, that knowingly or recklessly misleads, or attempts to mislead, a party to obtain financial or other benefit or to avoid an obligation;

iii. "collusive practice" is an arrangement between two or more parties designed to achieve an improper purpose, including to influence improperly the actions of another party;

iv. "coercive practice" is impairing or harming, or threatening to impair or harm, directly or indirectly, any party or the property of the party to influence improperly the actions of a party;

v. "obstructive practice" is:

(a) deliberately destroying, falsifying, altering, or concealing of evidence material to the investigation or making false statements to investigators in order to materially impede a Bank investigation into allegations of a corrupt, fraudulent, coercive, or collusive practice; and/or threatening, harassing, or intimidating any party to prevent it from disclosing its knowledge of matters relevant to the investigation or from pursuing the investigation; or

(b) acts intended to materially impede the exercise of the Bank's inspection and audit rights provided for under paragraph 2.2 e. below.

b. Rejects a proposal for award if the Bank determines that the firm or individual recommended for award, any of its personnel, or its agents, or its sub-consultants, sub-contractors, service providers, suppliers and/ or their employees, has, directly or indirectly, engaged in corrupt,

fraudulent, collusive, coercive, or obstructive practices in competing for the contract in question;

c. In addition to the legal remedies set out in the relevant Legal Agreement, may take other appropriate actions, including declaring mis-procurement, if the Bank determines at any time that representatives of the Borrower or of a recipient of any part of the proceeds of the loan engaged in corrupt, fraudulent, collusive, coercive, or obstructive practices during the procurement process, selection and/or execution of the contract in question, without the Borrower having taken timely and appropriate action satisfactory to the Bank to address such practices when they occur, including by failing to inform the Bank in a timely manner at the time they knew of the practices;

d. Pursuant to the Bank's Anti-Corruption Guidelines, and in accordance with the Bank's prevailing sanctions policies and procedures, may sanction a firm or individual, either indefinitely or for a stated period of time, including by publicly declaring such firm or individual ineligible (i) to be awarded or otherwise benefit from a Bank-financed contract, financially or in any other manner;1 (ii) to be a nominated2 sub-contractor, consultant, manufacturer or supplier, or service provider of an otherwise eligible firm being awarded a Bank-financed contract; and (iii) to receive the proceeds of any loan made by the Bank or otherwise to participate further in the preparation or implementation of any Bank-financed project;

e. Requires that a clause be included in bidding/request for proposals documents and in contracts financed by a Bank loan, requiring (i) bidders (applicants/proposers), consultants, contractors, and suppliers, and their sub-contractors, sub-consultants, service providers, suppliers, agents, personnel, permit the Bank to inspect[3] all accounts, records and other documents relating to the procurement process, selection and/or contract execution, and to have them audited by auditors appointed by the Bank.

---

[1] For the avoidance of doubt, a sanctioned party's ineligibility to be awarded a contract shall include, without limitation, (i) applying for pre-qualification, expressing interest in a consultancy, and bidding, either directly or as a nominated sub-contractor, nominated consultant, nominated manufacturer or supplier, or nominated service provider, in respect of such contract, and (ii) entering into an addendum or amendment introducing a material modification to any existing contract.

[2] A nominated sub-contractor, nominated consultant, nominated manufacturer or supplier, or nominated service provider (different names are used depending on the particular bidding document) is one which has been: (i) included by the bidder in its pre-qualification application or bid because it brings specific and critical experience and know-how that allow the bidder to meet the qualification requirements for the particular bid; or (ii) appointed by the Borrower.

[3] Inspections in this context usually are investigative (i.e., forensic) in nature. They involve fact-finding activities undertaken by the Bank or persons appointed by the Bank to address specific matters related to investigations/audits, such as evaluating the veracity of an allegation of possible Fraud and Corruption, through the appropriate mechanisms. Such activity includes but is not limited to: accessing and examining a firm's or individual's financial records and information, and making copies thereof as relevant; accessing and examining any other documents, data and information (whether in hard copy or electronic format) deemed relevant for the investigation/audit, and making copies thereof as relevant; interviewing staff and other relevant individuals; performing physical inspections and site visits; and obtaining third party verification of information.

APPENDIX 2
Sexual Exploitation and Abuse (SEA) and/or Sexual Harassment (SH) Performance Declaration for Subcontractors*

[The following table shall be filled in by each subcontractor proposed by the Supplier, that was not named in the Contract]

Subcontractor's Name: *[insert full name]*

Date: *[insert day, month, year]*
Contract reference *[insert contract reference]*
Page *[insert page number]* of *[insert total number]* pages

SEA and/or SH Declaration
We: ☐ (a) have not been subject to disqualification by the Bank for non-compliance with SEA/ SH obligations. ☐ (b) are subject to disqualification by the Bank for non-compliance with SEA/ SH obligations. ☐ (c) had been subject to disqualification by the Bank for non-compliance with SEA/ SH obligations, and were removed from the disqualification list. An arbitral award on the disqualification case has been made in our favor.
[*If (c) above is applicable, attach evidence of an arbitral award reversing the findings on the issues underlying the disqualification.]*
Period of disqualification: From: _____ To: _____

Name of the Subcontractor_____

Name of the person duly authorized to sign on behalf of the Subcontractor_____

Title of the person signing on behalf of the Subcontractor_____

Signature of the person named above_____

Date signed _____ day of _____, _____

Countersignature of authorized representative of the Supplier:
Signature: _____

Date signed _____ day of _____, _____

Section IX - Special Conditions of Contract

The following Special Conditions of Contract (SCC) shall supplement and / or amend the General Conditions of Contract (GCC). Whenever there is a conflict, the provisions herein shall prevail over those in the GCC.

GCC 1.1(i)	The Purchaser's Country is: Islamic Republic of Pakistan
GCC 1.1(j)	The Purchaser is: Hyderabad Electric Supply Company (HESCO), Pakistan.
GCC 1.1 (o)	The Project Site(s)/Final Destination(s) is/are: Regional Store MCPL Work Shop Jamshoro HESCO, Hyderabad/ Regional Store Nawabshah -Pakistan
GCC 1.1 (p)	The term **SEA/SH** where used in the Contract has the following meaning: • "**Sexual Exploitation and Abuse" "(SEA)"** means the following: **Sexual Exploitation** is defined as any actual or attempted abuse of position of vulnerability, differential power or trust, for sexual purposes, including, but not limited to, profiting monetarily, socially or politically from the sexual exploitation of another. **Sexual Abuse** is defined as the actual or threatened physical intrusion of a sexual nature, whether by force or under unequal or coercive conditions. • **"Sexual Harassment" "(SH)"** is defined as unwelcome sexual advances, requests for sexual favors, and other verbal or physical conduct of a sexual nature by supplier's personnel with other supplier's, or purchaser's personnel.
GCC 4.2 (a)	The meaning of the trade terms shall be as prescribed by Incoterms.
GCC 4.2 (b)	The version edition of Incoterms shall be 2020
GCC 5.1	The language shall be: English
GCC 8.1	For **notices**, the Purchaser's address shall be: Attention: Chief Engineer (Development)PMU HESCO Address: Bungalow # A-1 HESCO Power Colony Hussainabad, Hyderabad. City: Hyderabad Country: Pakistan Telephone: +92-22-9260070 Facsimile number: +92-22-9260525 Electronic mail address: cedevhesco@gmail.com, cepmu@hesco.gov.pk

GCC 9.1	The governing law shall be the law of*:* Islamic Republic Of Pakistan
GCC 10.2	The rules of procedure for arbitration proceedings pursuant to GCC Clause 10.2 shall be as follows: ***(a) Contract with foreign Supplier:*** GCC 10.2 (a)—Any dispute, controversy or claim arising out of or relating to this Contract, or breach, termination or invalidity thereof, shall be settled by arbitration in accordance with the UNCITRAL Arbitration Rules as at present in force. ***(b) Contracts with Supplier national of the Purchaser's Country:*** In the case of a dispute between the Purchaser and a Supplier who is a national of the Purchaser's Country, the dispute shall be referred to adjudication or arbitration in accordance with the laws of the Purchaser's Country i.e. Arbitration Act of 1940.
GCC 13.1	**1.<u>Goods Manufactured Outside the Purchaser's Country, to be Imported</u>** Details of Shipping and other Documents to be furnished by the Supplier are: **(i)** Four (4) Original supplier's Invoices showing the description of Goods, Quantity, Unit price, Total amount and Bank details (Title of account, IBAN, Swift code, Bank Branch name & address etc.) **(ii)** Original and 4 copies of negotiable on board bill of lading. **(iii)** Supplier's factory shipping/ packing details, **(iv)** Insurance Certificate (if any) **(v)** Manufacturers or Supplier's warranty certificate, **(vi)** Inspection certificate issued by nominated inspectors by HESCO. **(vii)** Certificate to the effect that the billed amount has not been claimed or received earlier. Details of Shipping and other Documents mentioned shall be required to be submitted 30 days before the expected date of arrival of material at the port. If not submitted, the supplier will be responsible for any consequent expense. **<u>Goods Manufactured in the Purchaser's Country</u>** Details of Shipping and other Documents to be furnished by the Supplier are: **(i)** Four (4) Original supplier's Invoices showing the description of Goods, Quantity, Unit price, Total amount and Bank details

	(Title of account, IBAN, Swift code, Bank Branch name & address etc.) along with sale Tax invoice. **(ii)** Supplier's factory shipping/ packing details, **(iii)** Insurance certificate (if any) **(iv)** Manufacturers or Supplier's warranty certificate, **(v)** Inspection certificate issued by nominated inspectors by HESCO **(vi)** Delivery note/ GRN duly stamped and signed by the consignee (consignee may be DM Regional Stature). **(vii)** Certificate to the effect that the billed amount has not been claimed or received earlier. **(viii)** Visual inspection certificate issued by Inspectors at the time of delivery in Store. **(ix)** Visual inspection certificate issued by Deputy Manager Regional Store at the time of delivery in Store. (x) Confirmation letter by the Manager (Procurement) HESCO against each invoice claim regarding the adequacy of the validity of the performance guarantee with respect to supplier/delivery. **3. <u>Completion of the Related Services</u>** (i) The acceptance/Handing & Taking over certificate issued by concerned Executive Engineer Operation. (ii) The testing & commissioning certificate issued by Consultant. (iii) The acceptance certificate issued by Manager MIS/AMI.
GCC 14.9	Cyber Security *Applicable, APMS Vendor must ensure the APMS inbuilt Cyber Security, compliant with NEPRA Cyber Security 2021.*

GCC 14.10	GCC 14.10.1 The Supplier shall have a code of conduct, and provide appropriate sensitization, for the Supplier's personnel carrying out that include, but not limited to, maintaining a safe working environment and not engaging in the following practices: (i) any form of sexual harassment including unwelcome sexual advances, requests for sexual favors, and other verbal or physical conduct of a sexual nature with other Supplier's or Purchaser's personnel; (ii) any form of sexual exploitation, which means any actual or attempted abuse of position of vulnerability, differential power or trust, for sexual purposes, including, but not limited to, profiting monetarily, socially or politically from the sexual exploitation of another; (iii) any form of sexual abuse, which means the actual or threatened physical intrusion of a sexual nature, whether by force or under unequal or coercive conditions; and (iv) any form of sexual activity with individuals under the age of 18, except in case of pre-existing marriage. GCC 14.10.2 The Purchaser may require the Supplier to remove (or cause to be removed), from the site or other places where the installation is being executed, a Supplier's personnel that undertakes behaviors that are inconsistent with the code of conduct stated in GCC 14.9.1. Notwithstanding any requirement from the Purchaser to replace any such person, the Supplier shall immediately remove (or cause to be removed) any such person, from the site or other places where the installation is being executed. In either case, the Supplier shall promptly appoint, as appropriate, a suitable replacement with equivalent skills and experience. **Checklist of Likely Environmental and Social Impacts for Procurement of Asset Performance Management System (APMS) is attached with bidding Document; these should to be complied by the Bidder.**
GCC 15.1	The prices charged for the Goods supplied and the related Services performed shall not be adjustable.
GCC 16.1	GCC 16.1—The method and conditions of payment to be made to the Supplier under this Contract shall be as follows: **A-Payment for Goods supplied from abroad:** Payment of foreign currency portion shall be made in currency of the contract price in the following manner:-

	(i) **Advance Payment:** Ten (10) percent of the Contract Price (Goods) excluding Taxes shall be paid within Sixty (60) days from receipt of bank guarantee for equivalent amount valid until the Goods are delivered and, in the form, provided in the bidding document or another form acceptable to the Purchaser. (ii) **On Shipment:** Eighty (80) percent of the Price of the Goods shipped shall be paid through irrevocable confirmed letter of credit opened in favor of the Supplier in a bank in its country, upon submission of documents specified in GCC Clause 13. (iii) **On Acceptance:** Ten (10) percent of the Contract Price of Goods received shall be paid within Sixty (60) days of receipt of the Goods upon submission of claim supported by the acceptance certificate issued by the Purchaser as mentioned in section VII. **B-Payment for Goods supplied from within the Purchaser's Country:** Payment for Goods supplied from within the Purchaser's Country shall be made, as follows: (i) **Advance Payment:** Ten (10) percent of the Contract Price (Goods) excluding Taxes shall be paid within Thirty (30) days from receipt of bank guarantee along-with invoice for the equivalent amount and in the form provided in the bidding document or another form acceptable to the Purchaser. (ii) **On Delivery:** Eighty (80) percent of the Contract Price of Goods shall be paid on receipt of the Goods and upon submission of the documents specified in GCC Clause 13. iii) **On Acceptance:** Ten (10) percent of the Contract Price of Goods received shall be paid within Thirty (30) days of receipt of the Goods upon submission of claim supported by the acceptance certificate issued by the Purchaser as mentioned in section VII. **C- Payment of Related Services: -** **On Completion of Services:** Hundred (100) percent Payment of completed related services shall be made within Thirty (30) days of presentation of claim supported by documents as mentioned in GCC Clause 13. Payment of the local currency portion shall be made in Pak Rupees within thirty (30) days of presentation of claim supported by a certificate from the purchaser declaring that the Goods have been delivered and that all other contracted services have been performed.
GCC 16.5	The payment-delay period after which the Purchaser shall pay interest to the supplier shall be Sixty (60) days. The interest rate that shall be applied is KIBOR+1 *% For Local currency* *SOFR+1% For US$*

GCC 18.1	A Performance Security shall be required. Performance Security "shall" be required equal to 10% of the Contract Price.
GCC 18.3	The Performance Security shall be in the form of a 'Demand Guarantee' issued by a reputable scheduled bank in Pakistan or abroad (under-written by a scheduled bank of Pakistan) acceptable to purchaser and having financial institution within Pakistan to make it enforceable. Performance security shall be denominated in the currencies of payment of the Contract, in accordance with their portions of the Contract Price
GCC 18.4	Discharge of the Performance Security shall take place not later than twenty-eight (28) days following the date of Completion of the Supplier's performance obligations under the Contract, including any warranty obligations.
GCC 24.1	The insurance coverage shall be as specified in the Incoterms.
GCC 25.1	Responsibility for transportations shall be as follows: "The Supplier is required under the Contract to transport the Goods to a specified place of final destination within the Purchaser's Country, defined as the Project Site, transport to such place of destination in the Purchaser's Country, including insurance and storage shall be arranged by the Supplier, and related costs shall be included in the Contract Price"
GCC 26.1	The inspections and tests shall be: As per specification given in technical section.
GCC 26.2	The Inspections and tests shall be conducted on the premises of supplier/manufacturer
GCC 27.1	The liquidated damage shall be: 0.5% of delayed Goods or unperformed Services per week. The maximum amount of liquidated damages shall be 10% of contract amount
GCC 28.3	i. The period of validity of the Warranty shall be**: 05 years** from the date of delivery of last consignment. The bidder shall be held responsible for all the losses and the unacceptable Goods shall be substituted with the acceptable Goods free of cost.

GCC 28.5 & 28.6	The period for replacement shall be: For Local item 30 days For imported 60 days Upon receipt of notice for correction of defects under warranty period the manufacturer/supplier shall, within 45 days (or the period specified in Specification) and with all reasonable speed, repair or replace the defective Goods or parts thereof. The cost of lifting the defective Goods, its subsequent repair or replacement and returning back to HESCO stores shall be borne by the supplier. If the supplied Goods or its part(s) is/are damaged during the warranty and need repair, its warranty period will be protected. The warranty period shall effectively remain active from the date of intimation of defective goods to the manufacturer/supplier and shall resume again once the defect has been removed and goods supplied back to HESCO stores. For Example: An item has a warranty period of 12 months. Its warranty starts on 1st January and it gets defective after its successful use/commissioning after 6 months on 5th July. The manufacturer/supplier is intimated about the defect on 7th July. The remaining warranty is 5 months and 23days. This remaining warranty period shall remain reserved. The item is lifted for repair on 15th July and returned to HESCO stores on 7th August. The remaining warranty of 5 months and 23 days will resume from 7th August. The warranty period of the entirely replaced item shall be as per the initial warranty period of new goods. If the Goods under warranty period already repaired are damaged again (second time) the procedure mentioned for the first time damage shall be followed. Accordingly, the same procedure shall be followed for damage/defect for the third time. However, if the goods under warranty period are damaged for the third time the manufacturer/supplier shall be issued a Performance Certificate that will have an impact on its participation in future bids/tenders in HESCO. NOTE: Liquidated Damages shall be applicable where there is a delay in delivery of material under the warranty claim. Liquidated Damages shall be applicable as per clause of Contract.
GCC 33.4	Not Applicable

Attachment: Price Adjustment Formula

Not Applicable

Section X - Contract Forms

Table of Forms

Notification of Intention to Award **190**

Letter of Acceptance **196**

Contract Agreement **197**

Performance Security **199**

Advance Payment Security **203**

Notification of Intention to Award

[*This Notification of Intention to Award shall be sent to each Bidder that submitted a Bid, unless the Bidder has previously received notice of exclusion from the process at an interim stage of the procurement process.*]

[*Send this Notification to the Bidder's Authorized Representative named in the Bidder Information Form*]

For the attention of Bidder's Authorized Representative

Name: *[insert Authorized Representative's name]*

Address: *[insert Authorized Representative's Address]*

Telephone/Fax numbers: *[insert Authorized Representative's telephone/fax numbers]*

Email Address: *[insert Authorized Representative's email address]*

[IMPORTANT: insert the date that this Notification is transmitted to Bidders. The Notification must be sent to all Bidders simultaneously. This means on the same date and as close to the same time as possible.]

DATE OF TRANSMISSION: This Notification is sent by: [*email/fax*] on [*date*] (local time)

Notification of Intention to Award

Purchaser: Hyderabad Electric Supply Company (HESCO)
Project: Electricity Distribution Efficiency Improvement Program
Contract title:
Loan No.: IBRD 93180-PK
RFB No: *[insert RFB reference number from Procurement Plan]*

This Notification of Intention to Award (Notification) notifies you of our decision to award the above contract. The transmission of this Notification begins the Standstill Period. During the Standstill Period you may:

a) request a debriefing in relation to the evaluation of your Bid, and/or

b) submit a Procurement-related Complaint in relation to the decision to award the contract.

1. The successful Bidder

Name:	[*insert name of successful Bidder*]
Address:	[*insert address of the successful Bidder*]
Contract price:	[*insert contract price of the successful Bid*]
Total combined score:	*[insert the total combined score of the successful Bidder]*

2. Other Bidders ***[INSTRUCTIONS: insert names of all Bidders that submitted a Bid, Bid prices as read out and evaluated, technical scores and combined scores.]***

Name of Bidder	Technical Score	Bid Price	Evaluated Bid Cost	Combined Score
[*insert name*]	*[insert Technical score]*	[*insert Bid price*]	*[insert evaluated cost]*	*[insert combined score]*
[*insert name*]	*[insert Technical score]*	[*insert Bid price*]	*[insert evaluated cost]*	*[insert combined score]*
[*insert name*]	*[insert Technical score]*	[*insert Bid price*]	*[insert evaluated cost]*	*[insert combined score]*
[*insert name*]	*[insert Technical score]*	[*insert Bid price*]	*[insert evaluated cost]*	*[insert combined score]*
[*insert name*]	*[insert Technical score]*	[*insert Bid price*]	*[insert evaluated cost]*	*[insert combined score]*

3. Reason/s why your Bid was unsuccessful ***[Delete if the combined score already reveals the reason]***

[INSTRUCTIONS: State the reason/s why <u>this</u> Bidder's Bid was unsuccessful. Do NOT include: (a) a point by point comparison with another Bidder's Bid or (b) information that is marked confidential by the Bidder in its Bid.]

4. How to request a debriefing

DEADLINE: The deadline to request a debriefing expires at midnight on [*insert date*] (local time).

You may request a debriefing in relation to the results of the evaluation of your Bid. If you decide to request a debriefing your written request must be made within three (3) Business Days of receipt of this Notification of Intention to Award.

Provide the contract name, reference number, name of the Bidder, contact details; and address the request for debriefing as follows:

Attention: [*insert full name of person, if applicable*]

Title/position: [*insert title/position*]

Agency: [*insert name of Purchaser*]

Email address: [*insert email address*]

Fax number: [*insert fax number*] ***delete if not used***

If your request for a debriefing is received within the 3 Business Days deadline, we will provide the debriefing within five (5) Business Days of receipt of your request. If we are unable to provide the debriefing within this period, the Standstill Period shall be extended by five (5) Business Days after the date that the debriefing is provided. If this happens, we will notify you and confirm the date that the extended Standstill Period will end.

The debriefing may be in writing, by phone, video conference call or in person. We shall promptly advise you in writing how the debriefing will take place and confirm the date and time.

If the deadline to request a debriefing has expired, you may still request a debriefing. In this case, we will provide the debriefing as soon as practicable, and normally no later than fifteen (15) Business Days from the date of publication of the Contract Award Notice.

5. How to make a complaint

Period: Procurement-related Complaint challenging the decision to award shall be submitted by midnight, [*insert date*] (local time).

Provide the contract name, reference number, name of the Bidder, contact details; and address the Procurement-related Complaint as follows:

Attention: [*insert full name of person, if applicable*]

Title/position: [*insert title/position*]

Agency: [*insert name of Purchaser*]

Email address: [*insert email address*]

Fax number: [*insert fax number*] ***delete if not used***

At this point in the procurement process, you may submit a Procurement-related Complaint challenging the decision to award the contract. You do not need to have requested, or received, a debriefing before making this complaint. Your complaint must be submitted within the Standstill Period and received by us before the Standstill Period ends.

Further information:

For more information see the Procurement Regulations for IPF Borrowers (Procurement Regulations) (Annex III). You should read these provisions before preparing and submitting your complaint. In addition, the World Bank's Guidance "How to make a Procurement-related Complaint" provides a useful explanation of the process, as well as a sample letter of complaint.

In summary, there are four essential requirements:

1. You must be an 'interested party'. In this case, that means a Bidder who submitted a Bid in this bidding process, and is the recipient of a Notification of Intention to Award.
2. The complaint can only challenge the decision to award the contract.
3. You must submit the complaint within the period stated above.
4. You must include, in your complaint, all of the information required by the Procurement Regulations (as described in Annex III).

6. Standstill Period

DEADLINE: The Standstill Period is due to end at midnight on [*insert date*] (local time).

The Standstill Period lasts ten (10) Business Days after the date of transmission of this Notification of Intention to Award.

The Standstill Period may be extended as stated in Section 4 above.

If you have any questions regarding this Notification please do not hesitate to contact us.

On behalf of the Purchaser:

Signature: _____

Name: _____

Title/position: _____

Telephone: _____

Email: _____

Beneficial Ownership Disclosure Form

INSTRUCTIONS TO BIDDERS: DELETE THIS BOX ONCE YOU HAVE COMPLETED THE FORM

This Beneficial Ownership Disclosure Form ("Form") is to be completed by the successful Bidder. In case of joint venture, the Bidder must submit a separate Form for each member. The beneficial ownership information to be submitted in this Form shall be current as of the date of its submission.

For the purposes of this Form, a Beneficial Owner of a Bidder is any natural person who ultimately owns or controls the Bidder by meeting one or more of the following conditions:

- *directly or indirectly holding 25% or more of the shares*
- *directly or indirectly holding 25% or more of the voting rights*
- *directly or indirectly having the right to appoint a majority of the board of directors or equivalent governing body of the Bidder*

RFB No.: [*insert number of RFB process*]
Request for Bid No.:

To:

In response to your request in the Letter of Acceptance *dated [insert date of letter of Acceptance]* to furnish additional information on beneficial ownership: *[select one option as applicable and delete the options that are not applicable]*

(i) we hereby provide the following beneficial ownership information.

Details of beneficial ownership

Identity of Beneficial Owner	Directly or indirectly holding 25% or more of the shares (Yes / No)	Directly or indirectly holding 25 % or more of the Voting Rights (Yes / No)	Directly or indirectly having the right to appoint a majority of the board of the directors or an equivalent governing body of the Bidder (Yes / No)
[include full name (last, middle, first), nationality, country of residence]			

OR

(ii) *We declare that there is no Beneficial Owner meeting one or more of the following conditions:*

- directly or indirectly holding 25% or more of the shares
- directly or indirectly holding 25% or more of the voting rights
- directly or indirectly having the right to appoint a majority of the board of directors or equivalent governing body of the Bidder

OR

(iii) We declare that we are unable to identify any Beneficial Owner meeting one or more of the following conditions. [If this option is selected, the Bidder shall provide explanation on why it is unable to identify any Beneficial Owner]

- directly or indirectly holding 25% or more of the shares
- directly or indirectly holding 25% or more of the voting rights
- directly or indirectly having the right to appoint a majority of the board of directors or equivalent governing body of the Bidder]"

Name of the Bidder: *[*insert complete name of the Bidder*]_____

Name of the person duly authorized to sign the Bid on behalf of the Bidder: **[*insert complete name of person duly authorized to sign the Bid*]_____

Title of the person signing the Bid: [*insert complete title of the person signing the Bid*]_____

Signature of the person named above: [*insert signature of person whose name and capacity are shown above*]_____

Date signed [*insert date of signing*] **day of** [*insert month*], [*insert year*]_____

* In the case of the Bid submitted by a Joint Venture specify the name of the Joint Venture as Bidder. In the event that the Bidder is a joint venture, each reference to "Bidder" in the Beneficial Ownership Disclosure Form (including this Introduction thereto) shall be read to refer to the joint venture member.

** Person signing the Bid shall have the power of attorney given by the Bidder. The power of attorney shall be attached with the Bid Schedules.

Letter of Acceptance

[letterhead paper of the Purchaser]

[date]

To: *[name and address of the Supplier]*

Subject: ***Notification of award Contract No.*** . . . . . .

This is to notify you that your Bid dated . . . . ***[insert date] . .*** . . for execution of the . . . . . ***. [insert name of the contract and identification number, as given in the SCC]*** . . . . . for the Accepted Contract Amount of . . . . . ***. [insert amount in numbers and words and name of currency]***, as corrected and modified in accordance with the Instructions to Bidders is hereby accepted by our Agency.

You are requested to furnish (i) the Performance Security within 28 days in accordance with the Conditions of Contract, using for that purpose one of the Performance Security Form*s* and (ii) the additional information on beneficial ownership in accordance with ITB 48.1 within eight (8) Business days using the Beneficial Ownership Disclosure Form, included in Section X, - Contract Forms, of the Bidding Document.

Authorized Signature: _____

Name and Title of Signatory: _____

Name of Agency: _____

Attachment: Contract Agreement

Contract Agreement

[The successful Bidder shall fill in this form in accordance with the instructions indicated]

THIS AGREEMENT made the *[insert: **number**]* day of *[insert: **month**]*, *[insert: **year**]*.

BETWEEN

(1) *[insert complete name of Purchaser]*, a *[insert description of type of legal entity, for example, an agency of the Ministry of .... of the Government of { insert name of Country of Purchaser }, or corporation incorporated under the laws of { insert name of Country of Purchaser }]* and having its principal place of business at *[insert address of Purchaser]* (hereinafter called "the Purchaser"), of the one part, and

(2) *[insert name of Supplier]*, a corporation incorporated under the laws of *[insert: country of Supplier]* and having its principal place of business at *[insert: address of Supplier]* (hereinafter called "the Supplier"), of the other part:

WHEREAS the Purchaser invited Bids for certain Goods and ancillary services, viz., *[insert brief description of Goods and Services]* and has accepted a Bid by the Supplier for the supply of those Goods and Services

The Purchaser and the Supplier agree as follows:

1. In this Agreement words and expressions shall have the same meanings as are respectively assigned to them in the Contract documents referred to.

2. The following documents shall be deemed to form and be read and construed as part of this Agreement. This Agreement shall prevail over all other contract documents.

   (a) the Letter of Acceptance

   (b) Letter of Bid - Technical Part

   (c) Letter of Bid - Financial Part

   (d) the Addenda Nos._____ (if any)

   (e) Special Conditions of Contract

   (f) General Conditions of Contract

   (g) the Specification (including Schedule of Requirements and Technical Specifications)

   (h) the completed Schedules (including Price Schedules)

   (i) any other document listed in GCC as forming part of the Contract

3. In consideration of the payments to be made by the Purchaser to the Supplier as specified in this Agreement, the Supplier hereby covenants with the Purchaser to provide the Goods and Services and to remedy defects therein in conformity in all respects with the provisions of the Contract.

4. The Purchaser hereby covenants to pay the Supplier in consideration of the provision of the Goods and Services and the remedying of defects therein, the Contract Price or such other sum as may become payable under the provisions of the Contract at the times and in the manner prescribed by the Contract.

IN WITNESS whereof the parties hereto have caused this Agreement to be executed in accordance with the laws of *[insert the name of the Contract governing law country]* on the day, month and year indicated above.

For and on behalf of the Purchaser:

Signed: *[insert signature]*

in the capacity of *[insert title or other appropriate designation]*

in the presence of *[insert identification of official witness]*

For and on behalf of the Supplier:

Signed: *[insert signature of authorized representative(s) of the Supplier]*

in the capacity of *[insert title or other appropriate designation]*

in the presence of *[insert identification of official witness]*

Performance Security

Option 1: (Bank Guarantee)

[The bank, as requested by the successful Bidder, shall fill in this form in accordance with the instructions indicated]

[Guarantor letterhead or SWIFT identifier code]

Beneficiary: *[insert name and Address of Purchaser]*

Date: *[Insert date of issue]*

PERFORMANCE GUARANTEE No.: *[Insert guarantee reference number]*

Guarantor: *[Insert name and address of place of issue, unless indicated in the letterhead]*

We have been informed that _ *[insert name of Supplier, which in the case of a joint venture shall be the name of the joint venture]* (hereinafter called "the Applicant") has entered into Contract No. *[insert reference number of the contract]* dated *[insert date]* with the Beneficiary, for the supply of _ *[insert name of contract and brief description of Goods and related Services]* (hereinafter called "the Contract").

Furthermore, we understand that, according to the conditions of the Contract, a performance guarantee is required.

At the request of the Applicant, we as Guarantor, hereby irrevocably undertake to pay the Beneficiary any sum or sums not exceeding in total an amount of *[insert amount in figures]* (_____) *[insert amount in words]*,[1] such sum being payable in the types and proportions of currencies in which the Contract Price is payable, upon receipt by us of the Beneficiary's complying demand supported by the Beneficiary's statement, whether in the demand itself or in a separate signed document accompanying or identifying the demand, stating that the Applicant is in breach of its obligation(s) under the Contract, without the Beneficiary needing to prove or to show grounds for your demand or the sum specified therein.

This guarantee shall expire, no later than the …. Day of ……, 2…[2], and any demand for payment under it must be received by us at this office indicated above on or before that date.

---

[1] *The Guarantor shall insert an amount representing the percentage of the Accepted Contract Amount specified in the Letter of Acceptance, and denominated either in the currency (ies) of the Contract or a freely convertible currency acceptable to the Beneficiary.*

[2] *Insert the date twenty-eight days after the expected completion date as described in GC Clause 18.4. The Purchaser should note that in the event of an extension of this date for completion of the Contract, the Purchaser would need to request an extension of this guarantee from the Guarantor. Such request must be in writing and must be made prior to the expiration date established in the guarantee. In preparing this guarantee, the Purchaser might consider adding*

This guarantee is subject to the Uniform Rules for Demand Guarantees (URDG) 2010 Revision, ICC Publication No. 758, except that the supporting statement under Article 15(a) is hereby excluded.

_____

[signature(s)]

Note: All italicized text (including footnotes) is for use in preparing this form and shall be deleted from the final product.

the following text to the form, at the end of the penultimate paragraph: "The Guarantor agrees to a one-time extension of this guarantee for a period not to exceed [six months] [one year], in response to the Beneficiary's written request for such extension, such request to be presented to the Guarantor before the expiry of the guarantee."

Option 2: Performance Bond (Not Applicable)

By this Bond *[insert name of Principal]* as Principal (hereinafter called "the Supplier") and *[insert name of Surety]* as Surety (hereinafter called "the Surety"), are held and firmly bound unto *[insert name of Purchaser]* as Oblige (hereinafter called "the Supplier") in the amount of *[insert amount in words and figures]*, for the payment of which sum well and truly to be made in the types and proportions of currencies in which the Contract Price is payable, the Supplier and the Surety bind themselves, their heirs, executors, administrators, successors and assigns, jointly and severally, firmly by these presents.

WHEREAS the Supplier has entered into a written Agreement with the Purchaser dated the __ day of _____, 20 _____, for *[name of contract and brief description of Goods and related Services]* in accordance with the documents, plans, specifications, and amendments thereto, which to the extent herein provided for, are by reference made part hereof and are hereinafter referred to as the Contract.

NOW, THEREFORE, the Condition of this Obligation is such that, if the Supplier shall promptly and faithfully perform the said Contract (including any amendments thereto), then this obligation shall be null and void; otherwise, it shall remain in full force and effect. Whenever the Supplier shall be, and declared by the Purchaser to be, in default under the Contract, the Purchaser having performed the Purchaser's obligations thereunder, the Surety may promptly remedy the default, or shall promptly:

(1) complete the Contract in accordance with its terms and conditions; or

(2) obtain a Bid or Bids from qualified Bidders for submission to the Purchaser for completing the Contract in accordance with its terms and conditions, and upon determination by the Purchaser and the Surety of the lowest responsive Bidder, arrange for a Contract between such Bidder and Purchaser and make available as work progresses (even though there should be a default or a succession of defaults under the Contract or Contracts of completion arranged under this paragraph) sufficient funds to pay the cost of completion less the Balance of the Contract Price; but not exceeding, including other costs and damages for which the Surety may be liable hereunder, the amount set forth in the first paragraph hereof. The term "Balance of the Contract Price," as used in this paragraph, shall mean the total amount payable by Purchaser to Supplier under the Contract, less the amount properly paid by Purchaser to the Supplier; or

(3) pay the Purchaser the amount required by Purchaser to complete the Contract in accordance with its terms and conditions up to a total not exceeding the amount of this Bond.

The Surety shall not be liable for a greater sum than the specified penalty of this Bond.

Any suit under this Bond must be instituted not later than twenty-eight (28) days following the date of completion of the Supplier's performance of its obligations under the Contract, including any warranty obligations.

No right of action shall accrue on this Bond to or for the use of any person or corporation other than the Purchaser named herein or the heirs, executors, administrators, successors, and assigns of the Purchaser.

In testimony whereof, the Supplier has hereunto set his hand and affixed his seal, and the Surety has caused these presents to be sealed with his corporate seal duly attested by the signature of his legal representative, this _____ day of _____ 20 ___.

SIGNED ON _____ on behalf of _____

By _____ in the capacity of _____

In the presence of _____

SIGNED ON _____ on behalf of _____

By _____ in the capacity of _____

In the presence of _____

Advance Payment Security

Demand Guarantee

[Guarantor letterhead or SWIFT identifier code]

Beneficiary: *[Insert name and Address of Purchaser]*

Date: *[Insert date of issue]*

ADVANCE PAYMENT GUARANTEE No.: *[Insert guarantee reference number]*

Guarantor: *[Insert name and address of place of issue, unless indicated in the letterhead]*

We have been informed that *[insert name of Supplier, which in the case of a joint venture shall be the name of the joint venture]* (hereinafter called "the Applicant") has entered into Contract No. *[insert reference number of the contract]* dated *[insert date]* with the Beneficiary, for the execution of *[insert name of contract and brief description of Goods and related Services]* (hereinafter called "the Contract").

Furthermore, we understand that, according to the conditions of the Contract, an advance payment in the sum *[insert amount in figures]* () *[insert amount in words]* is to be made against an advance payment guarantee.

At the request of the Applicant, we as Guarantor, hereby irrevocably undertake to pay the Beneficiary any sum or sums not exceeding in total an amount of *[insert amount in figures]* (_____) *[insert amount in words]*[1] upon receipt by us of the Beneficiary's complying demand supported by the Beneficiary's statement, whether in the demand itself or in a separate signed document accompanying or identifying the demand, stating either that the Applicant:

(a) has used the advance payment for purposes other than toward delivery of Goods; or

(b) has failed to repay the advance payment in accordance with the Contract conditions, specifying the amount which the Applicant has failed to repay.

A demand under this guarantee may be presented as from the presentation to the Guarantor of a certificate from the Beneficiary's bank stating that the advance payment referred to above has been

[1] *The Guarantor shall insert an amount representing the amount of the advance payment and denominated either in the currency(ies) of the advance payment as specified in the Contract, or in a freely convertible currency acceptable to the Purchaser.*

credited to the Applicant on its account number *[insert number]* at *[insert name and address of Applicant's bank]*.

The maximum amount of this guarantee shall be progressively reduced by the amount of the advance payment repaid by the Applicant as specified in copies of interim statements or payment certificates which shall be presented to us. This guarantee shall expire, at the latest, upon our receipt of a copy of the interim payment certificate indicating that ninety (90) percent of the Accepted Contract Amount, has been certified for payment, or on the *[insert day]* day of *[insert month]*, 2 *[insert year]*, whichever is earlier. Consequently, any demand for payment under this guarantee must be received by us at this office on or before that date.

This guarantee is subject to the Uniform Rules for Demand Guarantees (URDG) 2010 Revision, ICC Publication No.758, except that the supporting statement under Article 15(a) is hereby excluded.

_____

[signature(s)]

Note: All italicized text (including footnotes) is for use in preparing this form and shall be deleted from the final product.

Checklist of Likely Environmental and Social Impacts for Procurement of

i) "Supply of 3,500 Nos. Asset Performance Management System (APMS) along with Related Services For Installation On Distribution Transformers Of 200KVA Ratings"
ii) "Supply of 5,100 Nos. Asset Performance Management System (APMS) along with Related Services For Installation On Distribution Transformers Of 100KVA Ratings"

Name of Subproject:

Supply and Installation of Asset Performance Management System (APMS) 8600 Nos. are proposed under EDEIP in HESCO. APMS will be installed on the existing pole mounted transformers for the purpose to protect transformer and energy audit. The data retrieval process will be done at the existing HESCO MIS Data center Hyderabad.

Proposing Agency: HESCO

Subproject Location:

This project envisages supply and installation of Asset Performance Management System (APMS) on 100 kVA and 200 kVA Distribution Transformers in HESCO Region / Jurisdiction.

Subproject Objective:

The main objective of the sub-project is:

- To protect distribution transformers,
- Energy audit
- LT side protection of DTs against system overloads and fault currents.

Proposed Date of Commencement of Work:

Technical Drawing/Specifications Reviewed: No

Further Assessment Needs: No further assessment is needed.

I. Subproject Related Issues

	Issues	None	Minor / Small	Moderate / Medium	Significant / Large	Mitigation Measures/Remarks
A.	**Zoning and Land Use Planning**					
1	Will the subproject affect land use zoning and planning or conflict with prevalent land use patterns?	No				Land is not required for installation of APMS; it will be installed at Distribution Transformers (DTs) at near consumer premises at the existing pole mounted transformers.
2	Will the subproject involve significant land disturbance or site clearance?	No				APMS shall be installed at near consumer premises at the existing pole mounted distribution transformers.
3	Will the subproject land be subject to potential encroachment by urban or industrial use or located in an area intended for urban or industrial development?	No				
B	**Utilities and Facilities**					
4	Will the subproject require the setting up of ancillary facilities?	No				
5	Will the subproject make significant demands on utilities and services?	No				
6	Will the subproject require significant levels of accommodation or service amenities to support the workforce during construction (e.g., contractor will need more than 20 workers)?	No				

	Issues	None	Minor / Small	Moderate / Medium	Significant / Large	Mitigation Measures/Remarks
C	**Water and Soil Contamination**					
7	Will the subproject require large amounts of raw materials or construction materials?	No				
8	Will the subproject generate large amounts of residual wastes, construction material waste or cause soil erosion?	No				
9	Will the subproject result in potential soil or water contamination (e.g., from oil, grease and fuel from equipment yards)?	No				Procurement of APMS activity does not warrant ground and surface water contamination.
10	Soil Contamination due to storage of equipment at Warehouse?	None				As such no soil contamination due to storage of equipment at warehouse is envisaged. However, during the storage of meters at warehouse, utmost care would be taken to place equipment on wooden planks or concrete floor.
11	Will the subproject lead to contamination of ground and surface waters by herbicides for vegetation control and chemicals (e.g., calcium chloride) for dust control?	No				

	Issues	None	Minor / Small	Moderate / Medium	Significant / Large	Mitigation Measures/Remarks
12	Will the subproject lead to an increase in suspended sediments in streams affected by road cut erosion, decline in water quality and increased sedimentation downstream?	No				
13	Will the subproject involve the use of chemicals or solvents?	No				In Asset Performance Management System (APMS), no chemical or solvents are used.
14	Will the subproject lead to the destruction of vegetation and soil in the right-of-way, borrow pits, waste dumps, and equipment yards?	No				
15	Will the subproject lead to the creation of stagnant water bodies in borrow pits, quarries, etc., encouraging for mosquito breeding and other disease vectors?	No				
D.	**Noise and Air Pollution Hazardous Substances**					
16	Will the subproject increase the levels of harmful air emissions?	No				No unacceptable air emission is expected. Well maintained haulage trucks are used for transportation of material and also these carriages are periodic, not all the time.
17	Will the subproject increase ambient noise levels?	No				
18	Will the subproject involve the storage, handling or transport of hazardous substances?	No				During the handling utmost care will be taken by the suppliers to keep the equipment in safe and secure mode. Moreover, suppliers

	Issues	None	Minor / Small	Moderate / Medium	Significant / Large	Mitigation Measures/Remarks
						will ensure that more diligent care to be taken for handling and packing of the equipment as they are contractually obligated to follow standardized handling and packing procedures to ensure safety
E.	**Fauna and Flora**					
19	Will the subproject involve the disturbance or modification of existing drainage channels (rivers, canals) or surface water bodies (wetlands, marshes)?	No				
20	Will the subproject lead to the destruction or damage of terrestrial or aquatic ecosystems or endangered species directly or by induced development?	No				
21	Will the subproject lead to the disruption/destruction of wildlife through interruption of migratory routes, disturbance of wildlife habitats, and noise-related problems?	No				
F.	**Destruction/Disruption of Land and Vegetation**					
22	Will the subproject lead to unplanned use of the infrastructure being developed?	No				

	Issues	None	Minor / Small	Moderate / Medium	Significant / Large	Mitigation Measures/Remarks
23	Will the subproject lead to long-term or semi-permanent destruction of soils in cleared areas not suited for agriculture?	No				
24	Will the subproject lead to the interruption of subsoil and overland drainage patterns (in areas of cuts and fills)?	No				
25	Will the subproject lead to landslides, slumps, slips and other mass movements in road cuts?	No				
26	Will the subproject lead to erosion of lands receiving concentrated outflow carried by covered or open drains?	No				
27	Will the subproject lead to long-term or semipermanent destruction of soils in cleared areas not suited for agriculture?	No				
28	Will the subproject lead to health hazards and interference of plant growth adjacent to roads by dust raised and blown by vehicles?	No				
G.	**Cultural Property**					
29	Will the subproject have an impact on archaeological or historical sites, including historic urban areas?	No				

	Issues	None	Minor / Small	Moderate / Medium	Significant / Large	Mitigation Measures/Remarks
30	Will the subproject have an impact on religious monuments, structures and/or cemeteries?	No				
31	Have Chance Finds procedures been prepared for use in the subproject?	No				
H.	**Expropriation and Social Disturbance**					
32	Will the subproject involve land expropriation or demolition of existing structures?	No				
33	Will the subproject lead to induced settlements by workers and others causing social and economic disruption?	No				
34	Will the subproject lead to environmental and social disturbance by construction camps?	No				

II. Site Related Issues

	Issues	Yes	No	Don't Know	Mitigation Measures
1	Does the subproject require land acquisition? [Note: Fill in the land acquisition form if YES]		No		Land is not acquired for installation of APMS; these shall be installed at existing poles.
2	Will the subproject negatively impact livelihoods [Note: Describe separately if YES]		No		
3	Is the sub project located on land with contested ownership?		No		
4	Is the sub project located in an area with security problems		No		
5	Is the sub projected located on land reclaimed from floods (the ownership here may be contested)		No		
6	Is the subproject located in an area with designated natural reserves?		No		
7	Is the subproject located in an area with unique natural features?		No		
8	Is the subproject located in an area with endangered or conservation-worthy ecosystems, fauna or flora?		No		
9	Is the subproject located in an area falling within 500 meters of national forests, protected areas, wilderness areas, wetlands, biodiversity, critical habitats, or sites of historical or cultural importance?		No		
10	Is the subproject located in an area which would create a barrier for the movement of conservation-worthy wildlife or livestock?		No		
11	Is the subproject located close to groundwater sources, surface water bodies, water courses or wetlands?		No		
12	Is the subproject located in an area with designated cultural properties such as archaeological, historical and/or religious sites?		No		

	Issues	Yes	No	Don't Know	Mitigation Measures
13	Is the subproject in an area with religious monuments, structures and/or cemeteries?		No		
14	Is the project located in an area from where people have been displaced?		No		
15	Is the project located in an area where IDPs are temporarily settled?		No		
16	Is the project in a politically sensitive area?		No		
17	Is the subproject in a polluted or contaminated area?		No		
18	Is the subproject located in an area of high visual and landscape quality?		No		
19	Is the subproject located in an area susceptible to landslides or erosion?		No		
20	Is the subproject located in an area of seismic faults?		No.		Proposed schemes are not located in active fault zones.
21	Is the subproject located in a densely populated area?	Yes			APMS will be installed near consumer premises and at existing poles without disturbance to individual or property.
22	Is the project have risks to community safety associated with maintenance of lines and related facilities?		No		
23	Is project has community health hazards due to electromagnetic fields?		No		

	Issues	Yes	No	Don't Know	Mitigation Measures
24	Is the project have risks to community health and safety due to the transport, storage, and use and/or disposal of materials such as explosives, fuel and other chemicals during construction and operation?		No		During installation of APMS, proper safety measures, PTW and traffic management may avoid risks/accidents to workers. The equipment will be transported via National Highway Networks of the country. Moreover, HESCO warehouses are located on primary roads, minimizing traffic disruptions. As such, requirement for traffic management plan is unlikely.
25	Does the project have community safety risks due to both accidental and natural hazards, especially where the structural elements or components of the project (e.g., high voltage wires, and transmission towers and lines) are accessible to members of the affected community or where their failure could result in injury to the community throughout project construction, operation and decommissioning?	Yes			The community safety risks are insignificant. Though, the work area will be barricaded and safety signage will be installed in-order to avoid any safety hazard to the local population and passerby. The APMS will be installed at existing Poles. Elements or Components like high voltage wires and transmission towers are not involved.

	Issues	Yes	No	Don't Know	Mitigation Measures
26	Occupational Health and Safety (OHS) issues	Yes			The contractor will be required to prepare a Community and Occupational Health and Safety (COHS) Management Plan prior to the installation of APMS which shall be approved by PIMSC / Supervision Consultant /HESCO PMU. The COHS Plan will comply with the HESCO's Safety Manual, World Bank Group Environmental Health and Safety Guidelines, and best industry practice. The Plan will include standard operating procedures for all the activities included in the subproject particularly relating to working at heights (if applicable) and working near energized high voltage systems/wires. Implementation of COHS Management Plan will be regularly monitored during the installation / execution phase.

Signed by Safeguard Focal Person: _____

Title: _____

Date: _____

Signed by Project Director: _____

Name: _____

Title: _____